Heidrive

An Allient Company

HMD Next Generation - Servo Drive Systems

HeiMotion Dynamic

Introduction

The new highly dynamic HMD Next Generation series presents itself with overall lengths reduced by over 30 % compared to the predecessor motors and strongly optimised moments of inertia. The considerable reduction in length and the variety of flange sizes offer the optimum, highly dynamic solution for particularly small installation space. Numerous voltage variants and the finest power gradations leave nothing to be desired.

The HeiMotion Dynamic Next Generation motors are available in six different flange sizes:

- ☐ 60 mm - HMD06
- ☐ 80 mm - HMD08
- ☐ 100 mm - HMD10
- ☐ 130 mm - HMD13
- ☐ 150 mm - HMD15
- ☐ 190 mm - HMD19

Overview of features:

- 5 pole pairs
- Concentrated winding technology with high efficiency
- Voltage slope dU / dt 14 kV / µs due to encapsulated stator and special connection technology
- Temperature sensor PT1000; optional KTY
- Shortened end caps as standard for various encoders and plug-in systems

Contents

General Information	Page
Overview Motors	4
Mating Servo Drive Matrix	6
Operating Modes	8
Standards	9
Ambient Conditions and Technical Characteristics	10
Abbreviations and Definitions	11
Life Span	12
Order Code	13

HeiMotion Dynamic Motors	Page
HMD06	14
HMD08	26
HMD10	42
HMD13	58
HMD15	64
HMD19	70

Motor Options	Page
Configuration Options	76
Standard Resolver	80
Absolute Encoders AM 34	81
Options EnDAT® 2.2	82
Options HIPERFACE®	84
Options HIPERFACE DSL®	86
Options SSI / BiSS / Incremental encoders	88
Holding Brake	90
Connector Y-Tec	92
Connector M23	94
Connector M40 + M23	96
Terminal Box	98
Connectors for one Cable Solution	100

Servo Drives	Page
HCB Servo Drive	104
HCL Low Voltage Servo Drive	110

Overview

HeiMotion Dynamic Next Generation Motors

Type	Model	U_{bus} [V_{DC}]	I_o [A]	I_n [A]	M_o [Nm]	M_n [Nm]	M_{max} [Nm]	n_n [rpm]	J [kg/cm²]	P_n (S1) [W]
HMD06	HMD06-011	24	17.9	18.1	1.0	1.0	2.5	3,000	2.68E-01	315
		48	**9.6**	**10.0**	**1.0**	**1.0**	**2.5**	**3,000**	**2.68E-01**	**315**
		48	17.9	18.2	1.0	1.0	2.5	6,000	2.68E-01	630
		320	**1.29**	**1.34**	**1.0**	**1.0**	**2.5**	**3,000**	**2.68E-01**	**315**
		320	2.5	2.7	1.0	1.0	2.5	6,000	2.68E-01	630
		560	1.29	1.34	1.0	1.0	2.5	6,000	2.68E-01	630
		560	1.3	1.4	1.0	1.0	2.5	6,000	2.68E-01	630
	HMD06-019	**48**	**16.9**	**15.2**	**1.9**	**1.7**	**4.8**	**3,000**	**4.89E-01**	**530**
		320	**2.5**	**2.1**	**1.9**	**1.7**	**4.8**	**3,000**	**4.89E-01**	**530**
		320	4.6	3.6	1.9	1.45	4.8	6,000	4.89E-01	915
		560	1.3	1.2	1.9	1.7	4.8	3,000	4.89E-01	530
		560	2.5	2.0	1.9	1.45	4.8	6,000	4.89E-01	915
	HMD06-026	**48**	**20.4**	**20.0**	**2.6**	**2.5**	**6.5**	**3,000**	**7.11E-01**	**775**
		48	30.0[1)]	30.0	2.0[1)]	2.0	6.5	6,000	7.11E-01	1,250
		320	**3.2**	**3.2**	**2.6**	**2.5**	**6.5**	**3,000**	**7.11E-01**	**775**
		320	5.8	4.7	2.6	2.0	6.5	6,000	7.11E-01	1,250
		560	1.8	1.7	2.6	2.5	6.5	3,000	7.11E-01	775
		560	3.2	2.57	2.6	2.0	6.5	6,000	7.11E-01	1,250
HMD08	HMD08-024	24	45.3	45.4	2.4	2.3	6.0	3,000	8.00E-01	720
		48	**23.6**	**23.7**	**2.4**	**2.3**	**6.0**	**3,000**	**8.00E-01**	**720**
		48	45.3	42.5	2.4	2.1	6.0	5,500	8.00E-01	1,210
		320	**3.2**	**2.8**	**2.4**	**2.3**	**6.0**	**3,000**	**8.00E-01**	**720**
		320	5.4	4.9	2.4	2.1	6.0	5,500	8.00E-01	1,210
		560	**1.9**	**1.8**	**2.4**	**2.3**	**6.0**	**3,000**	**8.00E-01**	**720**
		560	3.2	2.9	2.4	2.1	6.0	5,500	8.00E-01	1,210
	HMD08-032	24	52.2	50.3	3.2	3.0	8.0	3,000	1.13E+00	940
		48	**27.6**	**26.6**	**3.2**	**3.0**	**8.0**	**3,000**	**1.13E+00**	**940**
		48	52.2	44.9	3.2	2.6	8.0	5,500	1.13E+00	1,500
		320	**4.3**	**4.2**	**3.2**	**3.0**	**8.0**	**3,000**	**1.13E+00**	**940**
		320	7.2	6.0	3.2	2.6	8.0	5,500	1.13E+00	1,500
		560	**2.4**	**2.3**	**3.2**	**3.0**	**8.0**	**3,000**	**1.13E+00**	**940**
		560	4.3	3.6	3.2	2.6	8.0	5,500	1.13E+00	1,500
	HMD08-042	24	62.4	59.9	4.2	3.9	10.5	3,000	1.46E+00	1,225
		48	**33.7**	**32.3**	**4.2**	**3.9**	**10.5**	**3,000**	**1.46E+00**	**1,225**
		48	62.4	54.0	4.2	3.4	10.5	5,500	1.46E+00	1,950
		320	**5.0**	**4.7**	**4.2**	**3.9**	**10.5**	**3,000**	**1.46E+00**	**1,225**
		320	8.6	7.2	4.2	3.4	10.5	5,500	1.46E+00	1,950
		560	**2.7**	**2.6**	**4.2**	**3.9**	**10.5**	**3,000**	**1.46E+00**	**1,225**
		560	5.0	4.3	4.2	3.4	10.5	5,500	1.46E+00	1,950
	HMD08-057	**48**	**47.7**	**54.8**	**5.7**	**5.3**	**14.3**	**3,000**	**2.12E+00**	**1,665**
		320	**6.5**	**6.1**	**5.7**	**5.3**	**14.3**	**3,000**	**2.12E+00**	**1,665**
		320	11.2	8.8	5.7	4.3	14.3	5,500	2.12E+00	2,480
		560	**3.4**	**3.3**	**5.7**	**5.3**	**14.3**	**3,000**	**2.12E+00**	**1,665**
		560	6.5	5.1	5.7	4.3	14.3	5,500	2.12E+00	2,480

[1)] Rated and/or standstill current of the motor greater than the rated current of the connection technology. When using this connection method, derating of the motor must be accepted.

Type	Model	U_{bus} [V_{DC}]	I_o [A]	I_n [A]	M_o [Nm]	M_n [Nm]	M_{max} [Nm]	n_n [rpm]	J [kg-cm²]	P_n (S1) [W]
HMD10	**HMD10-039**	**48**	**34.6**	**32.9**	**3.9**	**3.6**	**9.8**	**3,000**	**1.94E+00**	**1,130**
		48	56.0	48.5	3.9	3.2	9.8	5,000	1.94E+00	1,675
		320	**5.0**	**4.7**	**3.9**	**3.6**	**9.8**	**3,000**	**1.94E+00**	**1,130**
		320	8.2	7.0	3.9	3.2	9.8	5,000	1.94E+00	1,675
		560	**2.8**	**2.7**	**3.9**	**3.6**	**9.8**	**3,000**	**1.94E+00**	**1,130**
		560	5.0	4.3	3.9	3.2	9.8	5,000	1.94E+00	1,675
	HMD10-057	48	47.1	44.4	5.7	5.2	14.3	3,000	2.75E+00	1,635
		48	70.6	53.3	5.7	4.0	14.3	5,000	2.75E+00	2,095
		320	**6.5**	**6.1**	**5.7**	**5.2**	**14.3**	**3,000**	**2.75E+00**	**1,635**
		320	10.2	7.6	5.7	4.0	14.3	5,000	2.75E+00	2,095
		560	**3.6**	**3.4**	**5.7**	**5.2**	**14.3**	**3,000**	**2.75E+00**	**1,635**
		560	6.5	4.8	5.7	4.0	14.3	5,000	2.75E+00	2,095
	HMD10-076	**48**	**57.7**	**50.3**	**7.6**	**6.5**	**19.0**	**3,000**	**3.57E+00**	**2,000**
		320	**9.1**	**8.0**	**7.6**	**6.5**	**19.0**	**3,000**	**3.57E+00**	**2,000**
		320	13.5	9.4	7.6	4.8	19.0	5,000	3.57E+00	2,500
		560	**4.9**	**4.3**	**7.6**	**6.5**	**19.0**	**3,000**	**3.57E+00**	**2,000**
		560	9.1	6.3	7.6	4.8	19.0	5,000	3.57E+00	2,500
	HMD10-105	**48**	**82.3**	**70.6**	**10.5**	**8.6**	**26.3**	**3,000**	**5.21E+00**	**2,700**
		320	**11.0**	**9.0**	**10.5**	**8.6**	**26.3**	**3,000**	**5.21E+00**	**2,700**
		320	18.0	10.6	10.5	5.5	26.3	5,000	5.21E+00	2,900
		560	**6.4**	**5.5**	**10.5**	**8.6**	**26.3**	**3,000**	**5.21E+00**	**2,700**
		560	6.5	9.0	10.5	5.5	26.3	5,000	5.21E+00	2,900
HMD13	**HMD13-133**	560	5.5	4.8	13.3	11.5	33.3	2,000	8.21E+00	2,400
		560	**9.3**	**6.3**	**13.3**	**9.0**	**33.3**	**3,600**	**8.21E+00**	**3,400**
	HMD13-190	560	7.5	6.3	19.0	16.0	47.5	2,000	1.20E+01	3,350
		560	**13.7**	**8.2**	**19.0**	**11.2**	**47.5**	**3,600**	**1.20E+01**	**4,200**
	HMD13-245	560	9.7	8.2	24.5	20.5	61.3	2,000	1.58E+01	4,300
		560	**17.1**	**9.6**	**24.5**	**13.3**	**61.3**	**3,600**	**1.58E+01**	**5,000**
HMD15	**HMD15-036**	560	15.1	11.7	36.0	28.0	72.0	2,000	3.87E+01	5,850
		560	**22.6**	**13.2**	**36.0**	**21.0**	**72.0**	**3,000**	**3.87E+01**	**6,600**
	HMD15-043	560	18.0	13.8	42.5	32.5	85.0	2,000	4.82E+01	6,800
		560	**26.0**	**15.3**	**42.5**	**25.0**	**85.0**	**3,000**	**4.82E+01**	**7,850**
	HMD15-049	560	20.4	15.5	49.0	37.0	98.0	2,000	5.76E+01	7,750
		560	**30.0**	**17.8**	**49.0**	**29.0**	**98.0**	**3,000**	**5.76E+01**	**9,110**
HMD19	**HMD19-051**	560	24.5	16.6	51.0	35.5	102.0	2,000	7.42E+01	7,435
		560	35.9	17.6	51.0	25.5	102.0	3,000	7.42E+01	8,000
	HMD19-078	**560**	**38.0**	**24.4**	**78.0**	**51.5**	**156.0**	**2,000**	**1.10E+02**	**10,780**
		560	56.6	24.1	78.0	34.0	156.0	3,000	1.10E+02	10,680
	HMD19-105	**560**	**52.5**	**32.5**	**105.0**	**66.5**	**210.0**	**2,000**	**1.45E+02**	**13,920**

Standard version
If different from the standard version, longer delivery times are to be expected.

If rated current > 30 A observe connection technology (p. 78) and encoder selection (p. 76)!

HeiMotion Dynamic Motors Mating Servo Drive Matrix

Type	Model	n [rpm]	U_{bus} [V_{DC}]	I_o [A]	HCB 1 x 230 V_{AC}	HCB 3 x 400 V_{AC}	HCL 24 - 48 V_{DC}	HCL 24 - 48 V_{DC}
HMD06	HMD06-011	3000	24	17.9			HCL 60 C	HCL 120C/E
		3000	48	9.6			HCL 60 C	HCL 120C/E
		6000	48	17.9			HCL 60 C	HCL 120C/E
		3000	320	1.29	HCB 2/6-1	HCB 4/12-3		
		6000	320	2.5	HCB 4/12-1	HCB 4/12-3		
		3000	560	1.29		HCB 4/12-3		
		6000	560	1.3		HCB 4/12-3		
	HMD06-019	3000	48	16.9			HCL 60 C	HCL 120C/E
		3000	320	2.5	HCB 4/12-1	HCB 4/12-3		
		6000	320	4.6	HCB 8/24-1	HCB 8/24-3		
		3000	560	1.3		HCB 4/12-3		
		6000	560	2.5		HCB 4/12-3		
	HMD06-026	3000	48	20.4			HCL 225 CS/C/E	
		6000	48	30.0[1]			HCL 225 CS/C/E	
		3000	320	3.2	HCB 4/12-1	HCB 4/12-3		
		6000	320	5.8	HCB 8/24-1	HCB 8/24-3		
		3000	560	1.8		HCB 4/12-3		
		6000	560	3.2		HCB 4/12-3		
HMD08	HMD08-024	3000	24	45.3			HCL 225 CS/C/E	
		3000	48	23.6			HCL 225 CS/C/E	
		5500	48	45.3			HCL 225 CS/C/E	
		3000	320	3.2	HCB 4/12-1	HCB 4/12-3		
		5500	320	5.4	HCB 8/24-1	HCB 8/24-3		
		3000	560	1.9		HCB 4/12-3		
		5500	560	3.2		HCB 4/12-3		
	HMD08-032	3000	24	52.2				
		3000	48	27.6			HCL 225 CS/C/E	
		5500	48	52.2				
		3000	320	4.3	HCB 4/12-1	HCB 8/24-3		
		5500	320	7.2	HCB 8/24-1	HCB 8/24-3		
		3000	560	2.4		HCB 4/12-3		
		5500	560	4.3		HCB 8/24-3		
	HMD08-042	3000	24	62.4				
		3000	48	33.7			HCL 225 CS/C/E	
		5500	48	62.4				
		3000	320	5.0	HCB 8/24-1	HCB 8/24-3		
		5500	320	8.6		HCB 12/30-3		
		3000	560	2.7		HCB 4/12-3		
		5500	560	5.0		HCB 8/24-3		
	HMD08-057	3000	48	47.7				
		3000	320	3.4	HCB 8/24-1	HCB 8/24-3		
		5500	320	6.5		HCB 12/30-3		
		3000	560	3.6		HCB 4/12-3		
		5500	560	6.6		HCB 8/24-3		

[1] Rated and/or standstill current of the motor greater than the rated current of the connection technology. When using this connection method, derating of the motor must be accepted.

Type	Model	n [rpm]	U_{bus} [V_{DC}]	I_o [A]	HCB 1 x 230 V_{AC}	HCB 3 x 400 V_{AC}	HCL 24 - 48 V_{DC}	HCL 24 - 48 V_{DC}
HMD10	HMD10-039	3000	48	34.6			HCL 225 C/CS/E	
		5000	48	56				
		3000	320	5	HCB 8/24-1	HCB 8/24-3		
		5000	320	8.2		HCB 12/30-3		
		3000	560	2.8		HCB 4/12-3		
		5000	560	5		HCB 8/24-3		
	HMD10-057	3000	48	47.1				
		5000	48	70.6				
		3000	320	6.5	HCB 8/24-1	HCB 8/24-3		
		5000	320	10.2		HCB 12/30-3		
		3000	560	3.6		HCB 4/12-3		
		5000	560	6.5		HCB 8/24-3		
	HMD10-076	3000	48	57.7				
		3000	320	9.1		HCB 12/30-3		
		5000	320	13.5		HCB 20/50-3		
		3000	560	4.9		HCB 8/24-3		
		5000	560	9.1		HCB 12/30-3		
	HMD10-105	3000	48	82.3				
		3000	320	11		HCB 12/30-3		
		5000	320	18		HCB 20/50-3		
		3000	560	6.4		HCB 8/24-3		
		5000	560	11		HCB 12/30-3		
HMD13	HMD13-133	2000	560	5.5		HCB 8/24-3		
		3600	560	9.3		HCB 12/30-3		
	HMD13-190	2000	560	7.5		HCB 8/24-3		
		3600	560	13.7		HCB 20/50-3		
	HMD13-245	2000	560	9.7		HCB 12/30-3		
		3600	560	17.1		HCB 20/50-3		
HMD15	HMD15-036	2000	560	15.1		HCB 20/50-3		
		3000	560	22.6		HCB 40/100-3		
	HMD15-043	2000	560	18		HCB 20/50-3		
		3000	560	26		HCB 40/100-3		
	HMD15-049	2000	560	20.4		HCB 40/100-3		
		3000	560	30		HCB 40/100-3		
HMD19	HMD19-051	2000	560	24.5		HCB 40/100-3		
		3000	560	35.9		HCB 40/100-3		
	HMD19-078	2000	560	38		HCB 40/100-3		
		3000	560	56.6				
	HMD19-105	2000	560	52.5				

HCB
p. 104

HCL
p. 110

Operating Modes

	Definition	Graph
S1	Continuous operation with constant load	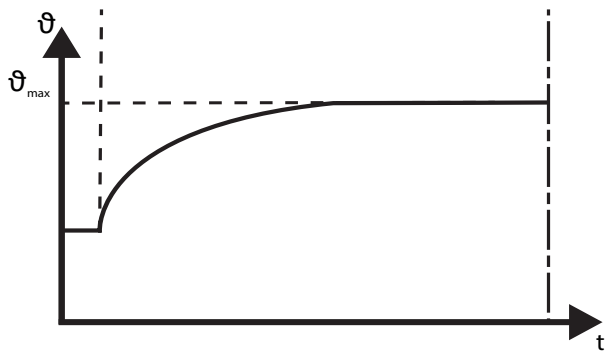
S3	Periodic intermittent operation without influence of the starting process on motor heating	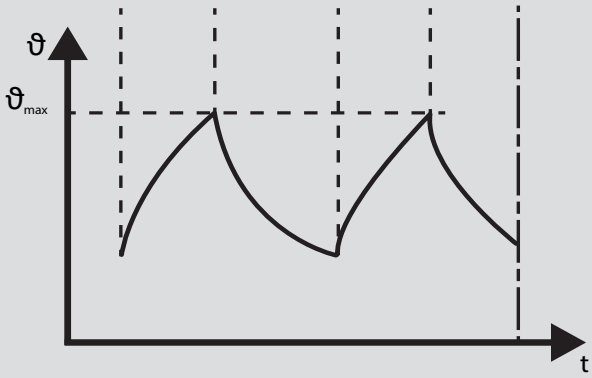

Applied Harmonized Standards

Standard	Explanation
EN ISO 12100:2010	Safety of machinery General design principles Risk assessment and risk reduction
EN 60034-1:2010 + Cor.:2010	Rotating electrical machines Part 1: Dimensioning and operating behavior
EN 60204-1:2018	Safety of machinery Electrical equipment of machines Part 1: General requirements
EN 60529:1991 + A1:2000 + A2:2013	Degrees of protection by enclosure (IP code)
EN IEC 60664-1:2020	Insulation coordination for equipment in low-voltage power supply systems Part 1: Principles, requirements and tests

General Information

Ambient Conditions and Technical Characteristics

Motor type		Permanent magnet three-phase synchronous servo motor
Ambient operating temperature		- 10 °C to + 40 °C
Ambient storage temperature		- 25 °C to + 70 °C
Humidity		< 90 % relative humidity (without condensation)
Insulation class		F (155 °C) Δ T = 115 K
Pollution level		2
Protection class		IP65 as standard, shaft outlet IP21 (ball bearing with sealing disc on request) -Optional with shaft seal IP65 (no dry running)
Max. mechanical rpm limit		10,000 rpm (higher upon request)
Cooling		Natural convective
Overvoltage category		II max. 4000 meters above sea level; III max. 3,000 meters above sea level
Bearing life		20,000 h under rated operation conditions (M_n)
Temperature sensor		PT1000; optional KTY
Voltage slew rate dU/dt		14 kV / µs
Maximum altitude		4,000 meters above sealevel; derate 1 % per 100 meters above 1,000 meters
Concentricity, coaxiality and axial run-out		N (normal) per DIN 42955
Vibration		Stage N in accordance to ISO 2373
Cogging torque factor c_t	HMD06 HMD08 HMD10 HMD13 - 19	< 2.0 % based on the stall torque (M_0) < 1.5 % based on the stall torque (M_0) < 1.2 % based on the stall torque (M_0) < 1.0 % based on the stall torque (M_0)
Coating		Black top coat, RAL 9005
Magnet material		Neodymium-Iron-Boron (NdFeB)
Shaft end		Cylindrical shaft end with / without keyway
Balancing quality		Q 2.5
Encoder systems		Resolver, HIPERFACE®, HIPERFACE DSL®, Incremental encoder, SSI/BiSS, EnDAT® 2.2
Approvals		CE, c UL us - certification (see E341694)

Abbreviations and Definitions

Abbr.	Unit	Tolerance	Explanation
f_n	[Hz]	-	Rated frequency
I_0	[A_{rms}]	± 10 %	Stall current per phase (motor current at stall torque M_0)
I_n	[A_{rms}]	± 10 %	Rated current (rated current per phase)
I_{max}	[A_{rms}]	-	Peak current (maximum permissible current per phase)
J	[kg-cm²]	-	Moment of inertia rotor (motor without brake)
k_e	[V_{rms} / krpm]	± 6 %	Voltage constant (induced voltage between two phases at 1,000 rpm) rms (root mean square value)
k_{tn}	[Nm / A_{rms}]	± 6 %	Torque constant (rms) at nominal point at 20 °C
L_{p-p}	[mH]	-	Winding inductance (2 phases) at rated current I_n
m	[kg]	-	Weight (motor without brake)
M_0	[Nm]	± 10 %	Stall torque (stall torque at S1)
M_n	[Nm]	± 10 %	Rated torque (continuous torque at S1)
M_{max}	[Nm]	-	Peak torque (maximum permissible torque for short periods)
n_n	[rpm]	-	Rated speed
n_{max}	[rpm]	-	Maximum speed
P_n	[W]	-	Rated power (mechanical power at the shaft)
R_{p-p}	[Ω]	± 5 % ± 10 %	Winding resistance (2 phases, at winding temperature of 20 °C), ± 5 % for 320/560 V_{DC}, ± 10 % for 24/48 V_{DC} motors
c_t	[%]	-	Local cogging torque $c_t = \frac{M_{cmax} - M_{cmin}}{M_0} \times 100\ \%$
M_{cmax}	[Nm]	-	Local maximum of the cogging torque
M_{cmin}	[Nm]	-	Local minimum of the cogging torque
T_{el}	[ms]	-	Electrical time constant
T_{th}	[min]	-	Thermal time constant
U_{mot}	[V_{rms}]	-	Rated motor voltage (2 phases at rated working point), rms
U_{bus}	[V_{DC}]	-	DC bus voltage

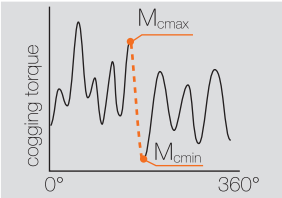

Life Span

Shaft Loading Forces

Life span of the motors is at least 20,000 hours if operated under rated conditions. The table below shows admissible radial forces for the bearing load. Point of force application is in the middle of the shaft (see drawing).

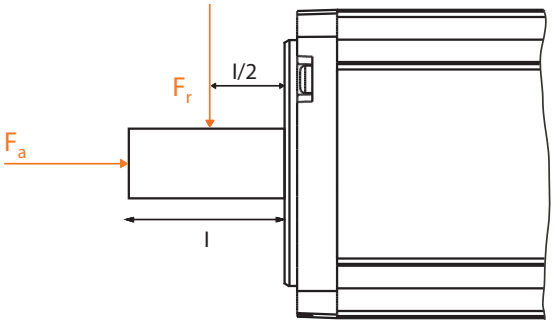

Maximum Radial Force F_r, [N]

	1,000 [rpm]	2,000 [rpm]	3,000 [rpm]	4,000 [rpm]	5,000 [rpm]	6,000 [rpm]	7,000 [rpm]	8,000 [rpm]	9,000 [rpm]	10,000 [rpm]
HMD06-011	355	280	245	220	205	195	185	175	170	160
HMD06-019	390	310	270	240	230	210	200	190	185	180
HMD06-026	400	320	280	260	240	220	210	200	195	190
HMD08-024	430	340	300	270	250	240	225	215	-	-
HMD08-032	460	370	320	290	270	250	240	230	-	-
HMD08-042	480	380	330	300	280	265	250	240	-	-
HMD08-057	510	410	350	320	300	280	270	260	-	-
HMD10-039	800	640	560	510	470	440	420	-	-	-
HMD10-057	850	670	590	535	500	470	445	-	-	-
HMD10-076	885	705	615	560	520	490	465	-	-	-
HMD10-105	940	740	650	615	570	540	510	-	-	-
HMD13-133	1,260	1,000	880	790	740	-	-	-	-	-
HMD13-190	1,340	1,070	930	840	780	-	-	-	-	-
HMD13-245	1,400	1,110	970	880	820	-	-	-	-	-
HMD15-036	1,640	1,300	1,140	1,030	-	-	-	-	-	-
HMD15-043	1,690	1,340	1,170	1,070	-	-	-	-	-	-
HMD15-049	1,730	1,370	1,200	1,090	-	-	-	-	-	-
HMD19-051	2,390	1,900	1,660	1,510	-	-	-	-	-	-
HMD19-078	2,530	2,010	1,750	1,590	-	-	-	-	-	-
HMD19-105	2,620	2,080	1,810	1,650	-	-	-	-	-	-

Maximum axial force: $F_a = 0.2 \times F_r$

At stall, a one-time axial force of 40 % of the radial force may be applied during motor mounting. Maximum allowed axial and radial forces must not occur together at the same time.

Order Code

HMD08-024-320-30-BPH2MW23W

Frame/flange size

60 mm	→	06
80 mm	→	08
100 mm	→	10
130 mm	→	13
150 mm	→	15
190 mm	→	19

Stall torque

1.1 Nm	→	011
1.9 Nm	→	019
2.4 Nm	→	024
2.6 Nm	→	026
3.2 Nm	→	032
3.9 Nm	→	039
4.2 Nm	→	042
5.7 Nm	→	057
7.6 Nm	→	076
10.5 Nm	→	105
13.3 Nm	→	133
19.0 Nm	→	190
24.5 Nm	→	245
36.0 Nm	→	036
42.5 Nm	→	043
49.0 Nm	→	049
51.0 Nm	→	051
78.0 Nm	→	078
105.0 Nm	→	105

DC bus voltage

24 V	→	024
48 V	→	048
320 V	→	320
560 V	→	560

Rated speed

2,000 rpm	→	20
3,000 rpm	→	30
3,600 rpm	→	36
5,000 rpm	→	50
5,500 rpm	→	55
6,000 rpm	→	60

Options

		Page
Without brake	0XXXXXXXX	
With brake	BXXXXXXXX	90
Without feather key	X0XXXXXXX	
With feather key	XPXXXXXXX	
Resolver	XXR1PXXXX	80
Resolver safely mounted	XXRAPXXXX	
HES 1 (1.0 V_{p-p})	XXM2SXXXX	88
HEM 1 (1.0 V_{p-p} without battery)	XXM1MXXXX	88
HEM 1 (1.0 V_{p-p} with battery)	XXM2MXXXX	88
HES 3	XXM3IXXXX	88
AM34 (Singleturn)	XXS1SXXXX	81
AM34 (Multiturn)	XXB1MXXXX	81
ECI 1118	XXE1SXXXX	82
EQI 1131	XXE1MXXXX	82
ECI 1319	XXE3SXXXX	82
EQI 1331	XXE3MXXXX	82
SEK 37	XXH1SXXXX	84
SEL 37	XXH1MXXXX	84
SKS 36	XXH2SXXXX	84
SKS 36S safely mounted	XXHBSXXXX	84
SKM 36	XXH2MXXXX	84
SKM 36S safely mounted	XXHBMXXXX	84
SRS 50	XXH3SXXXX	84
SRM 50	XXH3MXXXX	84
EES 37	XXD1SXXXX	86
EES 37-2 safely mounted	XXDASXXXX	86
EEM 37	XXD1MXXXX	86
EEM 37-2 safely mounted	XXDAMXXXX	86
EKS 36	XXD2SXXXX	86
EKS 36-2 safely mounted	XXDBSXXXX	86
EKM 36	XXD2MXXXX	86
EKM 36-2 safely mounted	XXDBMXXXX	86
EDS 35	XXD3SXXXX	86
EDM 35	XXD3MXXXX	86
M23 angled	XXXXXW23X	94
M40 angled	XXXXXW40X	96
M23 angled one cable solution	XXXXXI23X	102
M40 angled one cable solution	XXXXXI40X	103
Y-Tec	XXXXXY17X	92
I-Tec	XXXXXI17X	100
Cable outlet 1.5 m[1)]	XXXXXK15X	
Cable outlet 5 m[1)]	XXXXXK50X	
Terminal box[1) 2)]	XXXXXKB0X	98
Terminal box[1) 2)]	XXXXXKB2X	98
Terminal box[1) 2)]	XXXXXKA0X	98
Terminal box[1) 2)]	XXXXXKA2X	98
Without radial shaft seal	XXXXXXXX0	
With radial shaft seal	XXXXXXXXW	
AS ball bearing with double rubber seals[1)]	XXXXXXXXD	

1) Upon request
2) Mounting direction and cable gland see page 98/99

Example: HMD08-024-320-30-BPH2MW23W

Frame/flange size 80 mm
Stall torque 2.4 Nm
DC bus voltage 320 V
Rated speed 3,000 rpm

Options:
With brake
Without feather key
Encoder SKM 36
Angled connector M23
With radial shaft seal

HMD06-011

24 / 48 V

Specifications

		HMD06-011		
Rated speed [rpm]	n_n	3,000	3,000	6,000
Number of pole pairs		5	5	5
Wiring of the motor winding		Y	Y	Y
DC bus voltage [V_{DC}]	U_{bus}	24	48	48
Rated voltage motor [V_{rms}]	U_{mot}	14.6	26.2	26.2
Rated power [W] [1)]	P_n	315	315	630
Rated torque [Nm]	M_n	1.0	1.0	1.0
Rated current per phase [A_{rms}]	I_n	18.1	10.0	18.2
Stall torque [Nm]	**M_0**	**1.0**	**1.0**	**1.0**
Stall current per phase [A_{rms}]	I_0	17.9	9.6	17.9
Peak torque [Nm]	M_{max}	2.5	2.5	2.5
Peak current [A_{rms}]	I_{max}	53.2	26.4	53.4
Maximum speed [rpm]	n_{max}	3,620	4,520	7,410
Voltage constant at 1.000 rpm [V_{rms}]	k_e	3.50	6.5	3.50
Torque constant [Nm / A_{rms}]	k_t	0.055	0.100	0.055
Winding resistance (2 phases) at 20 °C [Ω]	R_{p-p}	0.1	0.4	0.1
Winding inductance (2 phases) [mH]	L_{p-p}	0.1	0.4	0.1
Electrical time constant [ms]	t_{el}	1.1	1.1	1.1
Thermal time constant [min]	t_{th}	25	25	25
Moment of inertia rotor [kg-cm²]	J	2.68E-01	2.68E-01	2.68E-01
Weight of motor [kg]	m	1.2	1.2	1.2

For standstill / rated current greater than 30 A, observe connection technology (Page 78) and encoder selection (Page 76)!
Other voltage variants available on request.
All nominal values with resolver.

Performance

HMD06-011-024-30-*

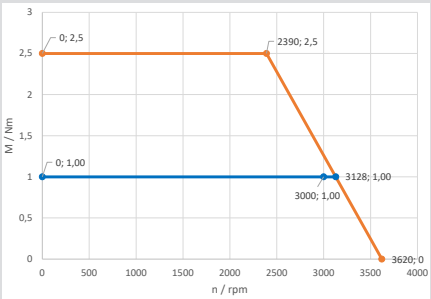

HMD06-011-048-30-*

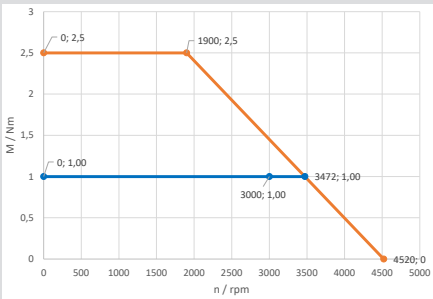

M max
M (S1)

[1)] For UL approval, an S1 characteristic curve deviating by approx. 15 % applies. The specifications on the nameplates correspond to the UL values.

Dimensions

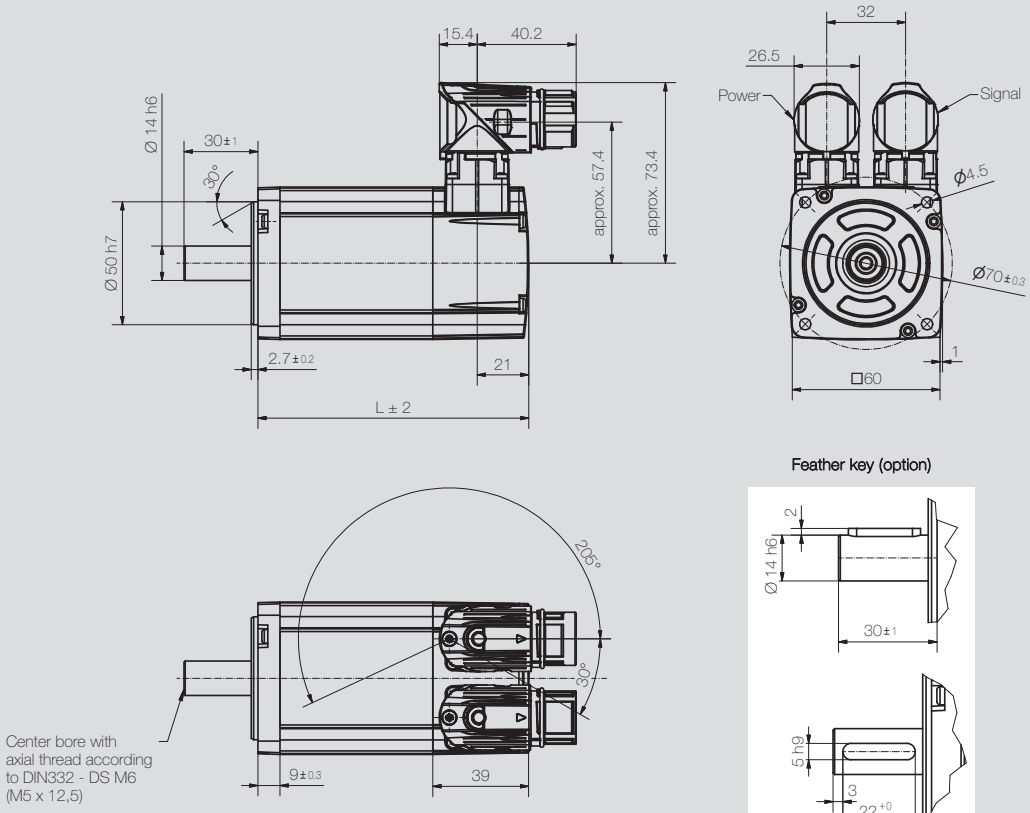

	L [mm]	
Motor	without brake	with brake
HMD06-011	110 mm	149 mm

HMD06-011-048-60-*

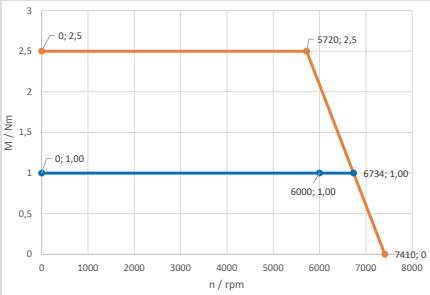

HMD06-011

320 / 560 V

Specifications

		HMD06-011			
Rated speed [rpm]	n_n	3,000	6,000	3,000	6,000
Number of pole pairs		5	5	5	5
Wiring of the motor winding		Y	Y	Y	Y
DC bus voltage [V_{DC}]	U_{bus}	320	320	560	560
Rated voltage motor [V_{rms}]	U_{mot}	192.4	181.0	192.4	347.0
Rated power [W]	P_n	315	630	315	630
Rated torque [Nm]	M_n	1.0	1.0	1.0	1.0
Rated current per phase [A_{rms}]	I_n	1.34	2.7	1.34	1.4
Stall torque [Nm]	M_0	1.0	1.0	1.0	1.0
Stall current per phase [A_{rms}]	I_0	1.29	2.5	1.29	1.3
Peak torque [Nm]	M_{max}	2.5	2.5	2.5	2.5
Peak current [A_{rms}]	I_{max}	3.8	7.1	3.8	3.8
Maximum speed [rpm]	n_{max}	4,540	8,000	7,595	7,595
Voltage constant at 1.000 rpm [V_{rms}]	k_e	48.1	25.4	48.1	48.1
Torque constant [Nm / A_{rms}]	k_t	0.748	0.378	0.748	0.714
Winding resistance (2 phases) at 20 °C [Ω]	R_{p-p}	21.0	5.9	21.0	21.0
Winding inductance (2 phases) [mH]	L_{p-p}	25.5	7.0	25.5	25.2
Electrical time constant [ms]	t_{el}	1.2	1.2	1.2	1.2
Thermal time constant [min]	t_{th}	25	25	25	25
Moment of inertia rotor [kg-cm²]	J	2.68E-01	2.68E-01	2.68E-01	2.68E-01
Weight of motor [kg]	m	1.2	1.2	1.2	1.2

For standstill / rated current greater than 30 A, observe connection technology (Page 78) and encoder selection (Page 76)!
Other voltage variants available on request.
All nominal values with resolver.

Performance

HMD06-011-320-30-*

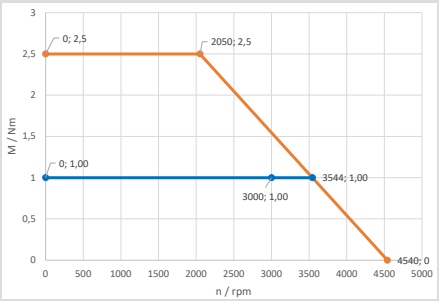

HMD06-011-320-60-*

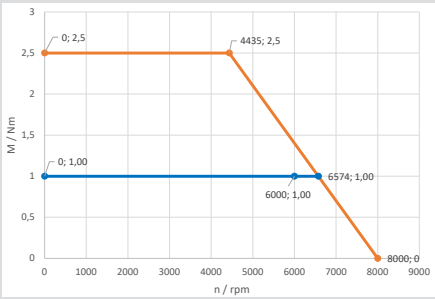

M max
M (S1)

Dimensions

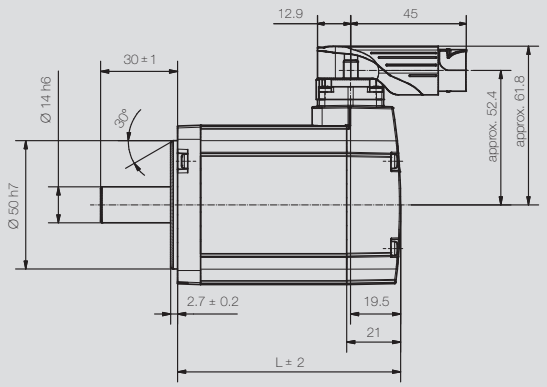

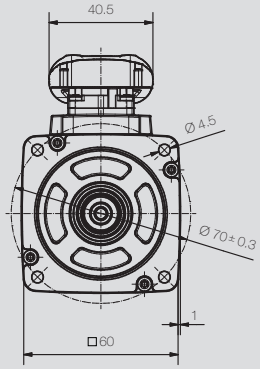

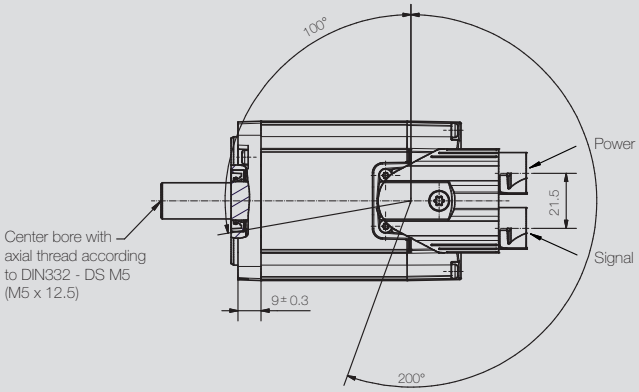

Feather key (option)

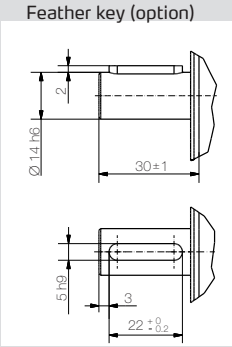

Motor	L [mm] *with encoder category 1** without brake	L [mm] *with encoder category 1** with brake	L [mm] *with encoder category 2** without brake	L [mm] *with encoder category 2** with brake
HMD06-011	92 mm	131 mm	110 mm	149 mm

** Encoder category 1: Resolver, ECI1118, SEK/SEL37, HESx/HEMx, AM 34; only for variants with U_{bus} = 320/560 V_{DC}*
Encoder category 2: Remaining encoders

HMD06-011-560-30-*

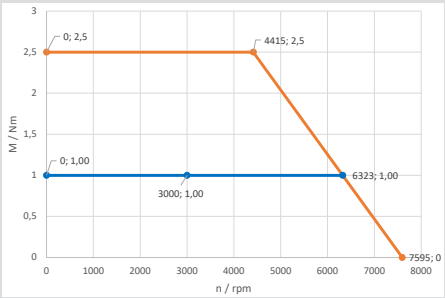

HMD06-011-560-60-*

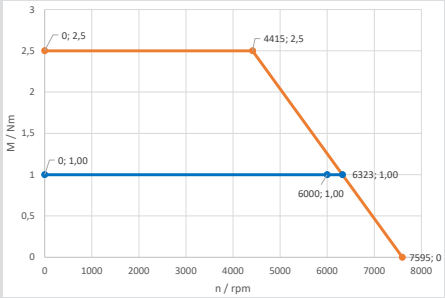

HMD06-019

48 V

Specifications

		HMD06-019
Rated speed [rpm]	n_n	3,000
Number of pole pairs		5
Wiring of the motor winding		Y
DC bus voltage [V_{DC}]	U_{bus}	48
Rated voltage motor [V_{rms}]	U_{mot}	25.6
Rated power [W] [1)]	P_n	530
Rated torque [Nm]	M_n	1.7
Rated current per phase [A_{rms}]	I_n	15.2
Stall torque [Nm]	**M_0**	**1.9**
Stall current per phase [A_{rms}]	I_0	16.9
Peak torque [Nm]	M_{max}	4.8
Peak current [A_{rms}]	I_{max}	48.5
Maximum speed [rpm]	n_{max}	4,000
Voltage constant at 1.000 rpm [V_{rms}]	k_e	7.1
Torque constant [Nm / A_{rms}]	k_t	0.112
Winding resistance (2 phases) at 20 °C [Ω]	R_{p-p}	0.2
Winding inductance (2 phases) [mH]	L_{p-p}	0.2
Electrical time constant [ms]	t_{el}	1.4
Thermal time constant [min]	t_{th}	25
Moment of inertia rotor [kg-cm²]	J	4.89E-01
Weight of motor [kg]	m	1.6

For standstill / rated current greater than 30 A, observe connection technology (Page 78) and encoder selection (Page 76)!
Other voltage variants available on request.
All nominal values with resolver.

Performance

HMD06-019-048-30-*

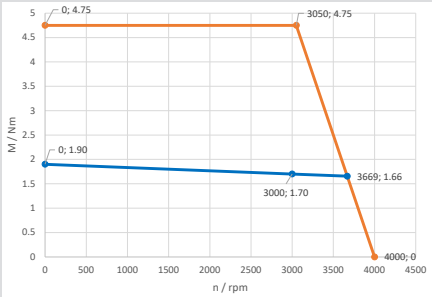

M max
M (S1)

[1)] For UL approval, an S1 characteristic curve deviating by approx. 15 % applies. The specifications on the nameplates correspond to the UL values..

Dimensions

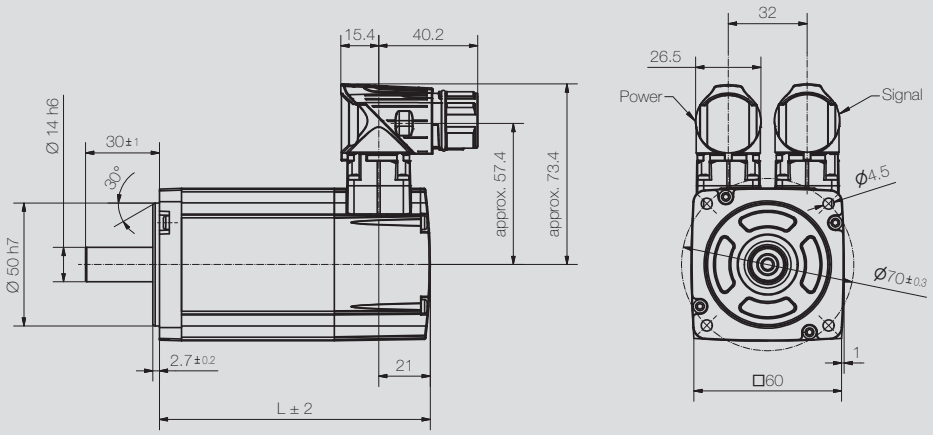

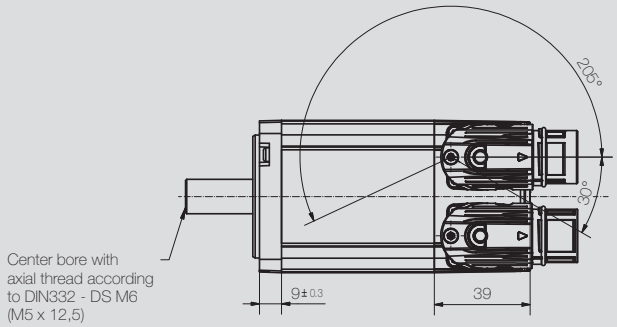

Feather key (option)

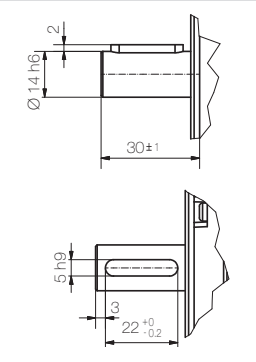

Motor	L [mm] without brake	L [mm] with brake
HMD06-019	135 mm	174 mm

HMD06-019

320 / 560 V

Specifications

		HMD06-019			
Rated speed [rpm]	n_n	3,000	6,000	3,000	6,000
Number of pole pairs		5	5	5	5
Wiring of the motor winding		Y	Y	Y	Y
DC bus voltage [V_{DC}]	U_{bus}	320	320	560	560
Rated voltage motor [V_{rms}]	U_{mot}	168.0	167.0	312.0	331.0
Rated power [W]	P_n	530	915	530	915
Rated torque [Nm]	M_n	1.7	1.5	1.7	1.5
Rated current per phase [A_{rms}]	I_n	2.1	3.6	1.2	2.0
Stall torque [Nm]	M_0	1.9	1.9	1.9	1.9
Stall current per phase [A_{rms}]	I_0	2.5	4.6	1.30	2.5
Peak torque [Nm]	M_{max}	4.8	4.8	4.8	4.8
Peak current [A_{rms}]	I_{max}	6.7	12.3	3.5	6.7
Maximum speed [rpm]	n_{max}	4,370	8,140	4,025	7,335
Voltage constant at 1.000 rpm [V_{rms}]	k_e	48.4	26.5	91.1	48.4
Torque constant [Nm / A_{rms}]	k_t	0.802	0.398	1.440	0.722
Winding resistance (2 phases) at 20 °C [Ω]	R_{p-p}	7.1	2.2	24.8	7.1
Winding inductance (2 phases) [mH]	L_{p-p}	10.2	3.0	37.3	10.2
Electrical time constant [ms]	t_{el}	1.4	1.4	1.5	1.4
Thermal time constant [min]	t_{th}	25	25	25	25
Moment of inertia rotor [kg-cm²]	J	4.89E-01	4.89E-01	4.89E-01	4.89E-01
Weight of motor [kg]	m	1.6	1.6	1.6	1.6

For standstill / rated current greater than 30 A, observe connection technology (Page 78) and encoder selection (Page 76)!
Other voltage variants available on request.
All nominal values with resolver.

Performance

HMD06-019-320-30-*

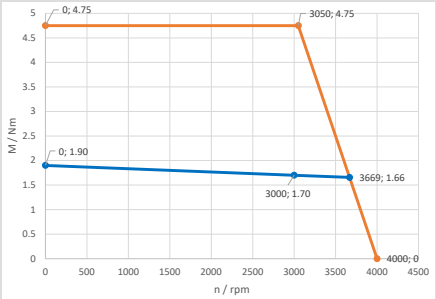

HMD06-019-320-60-*

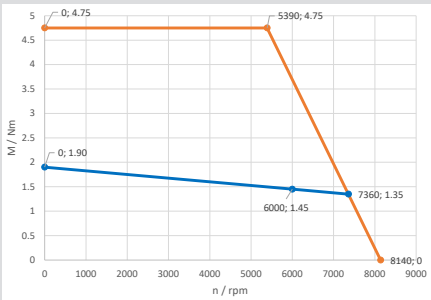

M max
M (S1)

Dimensions

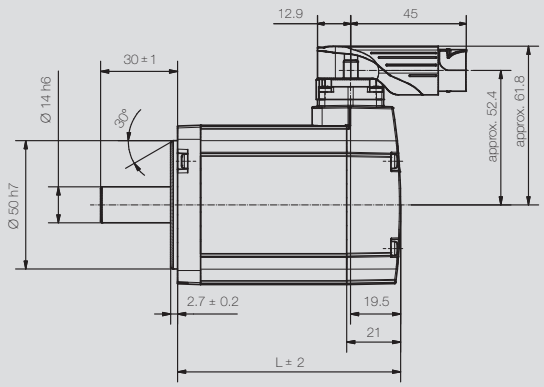

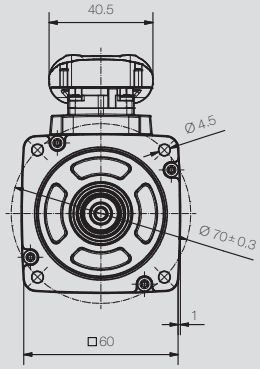

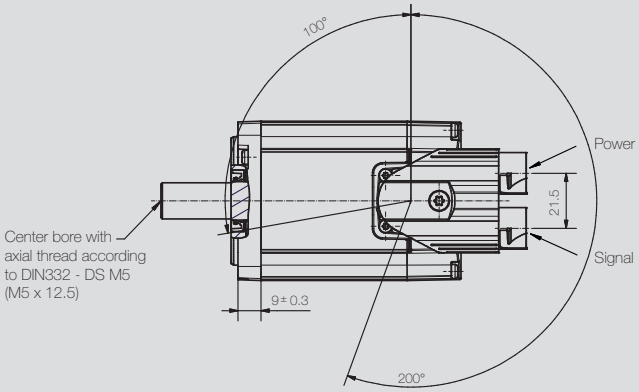

Feather key (option)

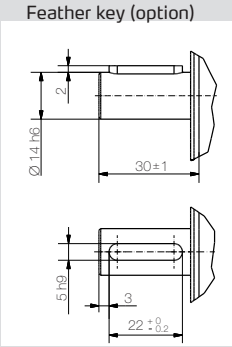

Motor	L [mm] *with encoder category 1** without brake	L [mm] *with encoder category 1** with brake	L [mm] *with encoder category 2** without brake	L [mm] *with encoder category 2** with brake
HMD06-019	117 mm	156 mm	135 mm	174 mm

** Encoder category 1: Resolver, ECI1118, SEK/SEL37, HESx/HEMx, AM 34; only for variants with U_{bus} = 320/560 V_{DC}*
Encoder category 2: Remaining encoders

HMD06-019-560-30-*

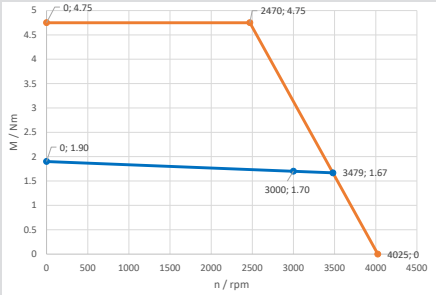

HMD06-019-560-60-*

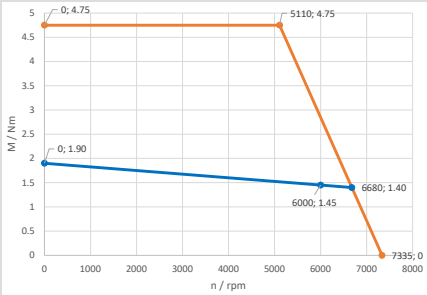

HMD06-026

48 V

Specifications

		HMD06-026	
Rated speed [rpm]	n_n	3,000	6,000
Number of pole pairs		5	5
Wiring of the motor winding		Y	Y
DC bus voltage [V_{DC}]	U_{bus}	48	48
Rated voltage motor [V_{rms}]	U_{mot}	27.4	27.1
Rated power [W] [1]	P_n	785	1,250
Rated torque [Nm]	M_n	2.5	2.0
Rated current per phase [A_{rms}]	I_n	20.0	30.0
Stall torque [Nm]	**M_0**	**2.6**	**2.0[2]**
Stall current per phase [A_{rms}]	I_0	20.4	30.0[2]
Peak torque [Nm]	M_{max}	6.5	6.5
Peak current [A_{rms}]	I_{max}	53.6	108.0
Maximum speed [rpm]	n_{max}	3,785	6,990
Voltage constant at 1.000 rpm [V_{rms}]	k_e	8.0	4.2
Torque constant [Nm / A_{rms}]	k_t	0.125	0.066
Winding resistance (2 phases) at 20 °C [Ω]	R_{p-p}	0.12	0.0
Winding inductance (2 phases) [mH]	L_{p-p}	0.2	0.1
Electrical time constant [ms]	t_{el}	1.5	1.5
Thermal time constant [min]	t_{th}	25	25
Moment of inertia rotor [kg-cm²]	J	7.11E-01	7.11E-01
Weight of motor [kg]	m	2.0	2.0

For standstill / rated current greater than 30 A, observe connection technology (Page 78) and encoder selection (Page 76)!
Other voltage variants available on request.
All nominal values with resolver.

Performance

HMD06-026-048-30-*

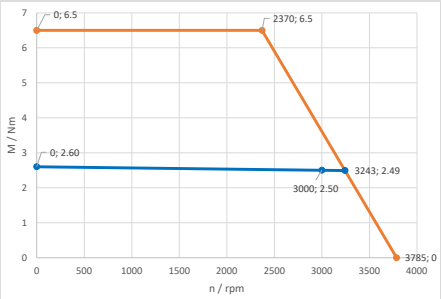

HMD06-026-048-60-*

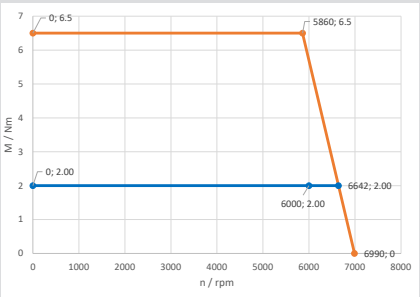

M max
M (S1)

[1] For UL approval, an S1 characteristic curve deviating by approx. 15 % applies. The specifications on the nameplates correspond to the UL values.
[2] Rated and/or standstill current of the motor greater than the rated current of the connection technology. When using this connection method, derating of the motor must be accepted.

Dimensions

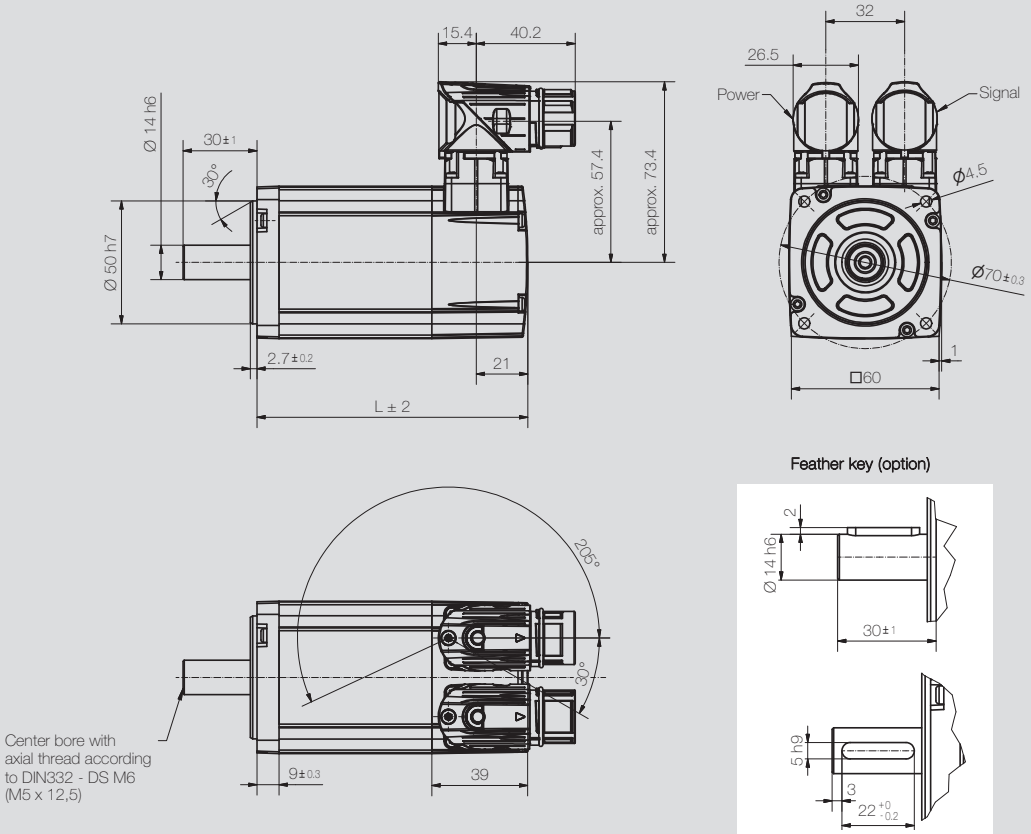

Motor	L [mm] without brake	L [mm] with brake
HMD06-026	165 mm	204 mm

HMD06-026

320 / 560 V

Specifications

		HMD06-026			
Rated speed [rpm]	n_n	3,000	6,000	3,000	6,000
Number of pole pairs		5	5	5	5
Wiring of the motor winding		Y	Y	Y	Y
DC bus voltage [V_{DC}]	U_{bus}	320	320	560	560
Rated voltage motor [V_{rms}]	U_{mot}	168.0	172.0	317.0	309.0
Rated power [W]	P_n	785	1,250	785	1,250
Rated torque [Nm]	M_n	2.5	2.0	2.5	2.0
Rated current per phase [A_{rms}]	I_n	3.2	4.7	1.7	2.59
Stall torque [Nm]	M_0	2.6	2.6	2.6	2.6
Stall current per phase [A_{rms}]	I_0	3.2	5.8	1.8	3.2
Peak torque [Nm]	M_{max}	6.5	6.5	6.5	6.5
Peak current [A_{rms}]	I_{max}	8.5	16.3	4.4	8.5
Maximum speed [rpm]	n_{max}	4,130	7,210	3,645	6,595
Voltage constant at 1.000 rpm [V_{rms}]	k_e	50.2	27.6	97.1	50.2
Torque constant [Nm / A_{rms}]	k_t	0.793	0.427	1.510	0.772
Winding resistance (2 phases) at 20 °C [Ω]	R_{p-p}	4.8	1.5	17.9	4.80
Winding inductance (2 phases) [mH]	L_{p-p}	7.3	2.2	27.1	7.3
Electrical time constant [ms]	t_{el}	1.5	1.5	1.5	1.5
Thermal time constant [min]	t_{th}	25	25	25	25
Moment of inertia rotor [kg-cm²]	J	7.11E-01	7.11E-01	7.11E-01	7.11E-01
Weight of motor [kg]	m	2.0	2.0	2.0	2.0

For standstill / rated current greater than 30 A, observe connection technology (Page 78) and encoder selection (Page 76)!
Other voltage variants available on request.
All nominal values with resolver.

Performance

HMD06-026-320-30-*

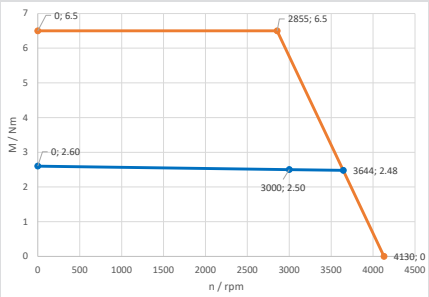

HMD06-026-320-60-*

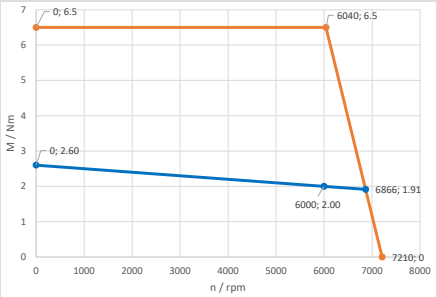

M max
M (S1)

Dimensions

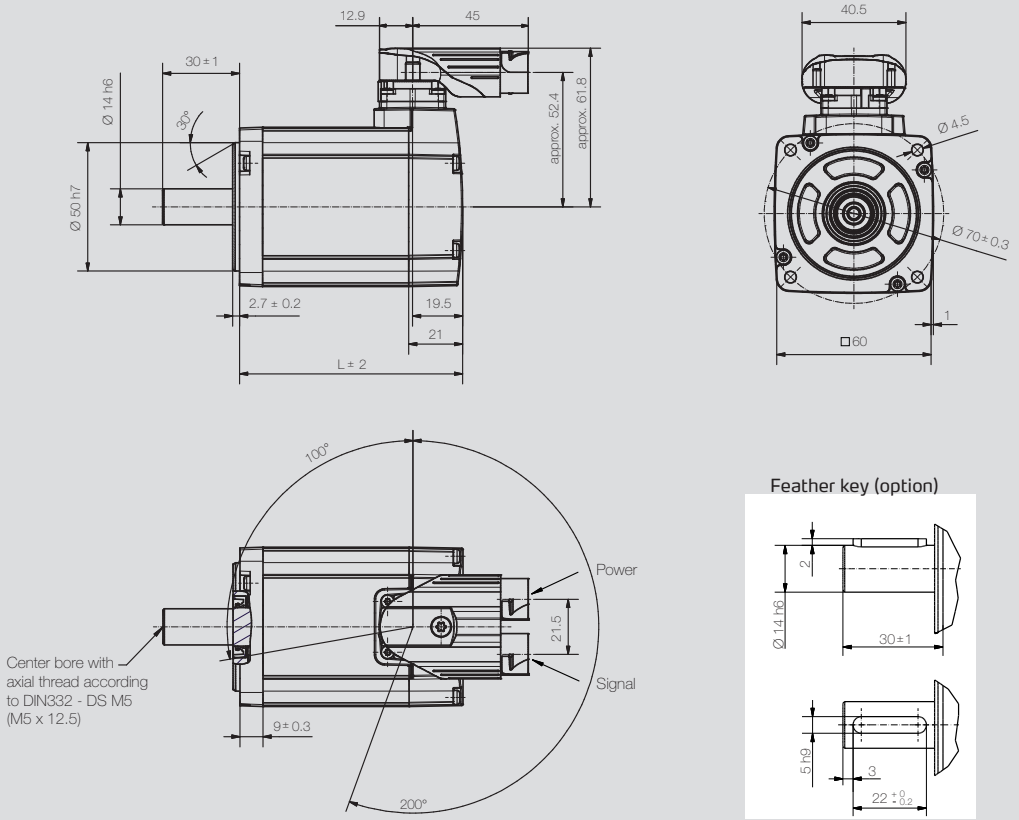

Motor	L [mm] *with encoder category 1** without brake	L [mm] *with encoder category 1** with brake	L [mm] *with encoder category 2** without brake	L [mm] *with encoder category 2** with brake
HMD06-026	147 mm	186 mm	165 mm	204 mm

** Encoder category 1: Resolver, ECI1118, SEK/SEL37, HESx/HEMx, AM 34; only for variants with U_{bus} = 320/560 V_{DC}*
Encoder category 2: Remaining encoders

HMD06-026-560-30-*

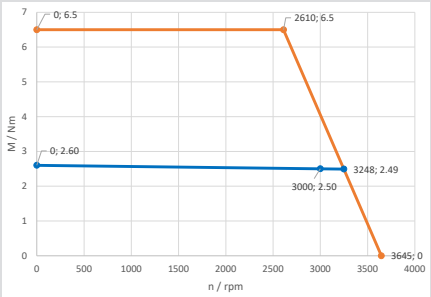

HMD06-026-560-60-*

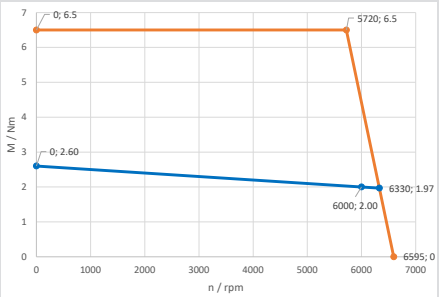

HMD08-024

24 / 48 V

Specifications

		HMD08-024		
Rated speed [rpm]	n_n	3,000	3,000	5,500
Number of pole pairs		5	5	5
Wiring of the motor winding		Y	Y	Y
DC bus voltage [V_{DC}]	U_{bus}	24	48	48
Rated voltage motor [V_{rms}]	U_{mot}	13.7	26.3	23.2
Rated power [W] [1)]	P_n	720	720	1,210
Rated torque [Nm]	M_n	2.3	2.3	2.1
Rated current per phase [A_{rms}]	I_n	45.4	23.7	42.5
Stall torque [Nm]	**M_0**	**2.4**	**2.4**	**2.4**
Stall current per phase [A_{rms}]	I_0	45.3	23.6	45.3
Peak torque [Nm]	M_{max}	6.0	6.0	6.0
Peak current [A_{rms}]	I_{max}	138.3	64.5	138.3
Maximum speed [rpm]	n_{max}	4,480	4,800	9,170
Voltage constant at 1.000 rpm [V_{rms}]	k_e	3.4	7.2	3.4
Torque constant [Nm / A_{rms}]	k_t	0.051	0.097	0.049
Winding resistance (2 phases) at 20 °C [Ω]	R_{p-p}	0.0	0.1	0.0
Winding inductance (2 phases) [mH]	L_{p-p}	0.1	0.3	0.1
Electrical time constant [ms]	t_{el}	2.3	2.3	2.4
Thermal time constant [min]	t_{th}	30	30	30
Moment of inertia rotor [kg-cm²]	J	8.00E-01	8.00E-01	8.00E-01
Weight of motor [kg]	m	2.5	2.5	2.5

For standstill / rated current greater than 30 A, observe connection technology (Page 78) and encoder selection (Page 76)!
Other voltage variants available on request.
All nominal values with resolver.

Performance

HMD08-024-024-30-*

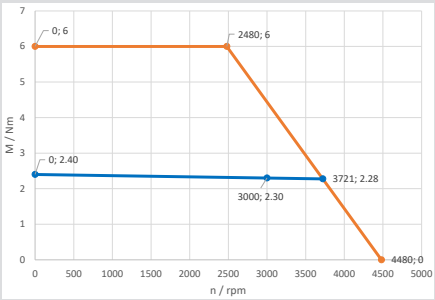

HMD08-024-048-30-*

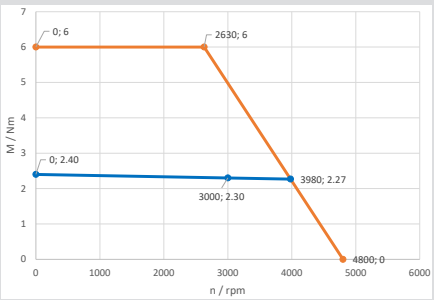

M max
M (S1)

[1)] For UL approval, an S1 characteristic curve deviating by approx. 15 % applies. The specifications on the nameplates correspond to the UL values..

Dimensions

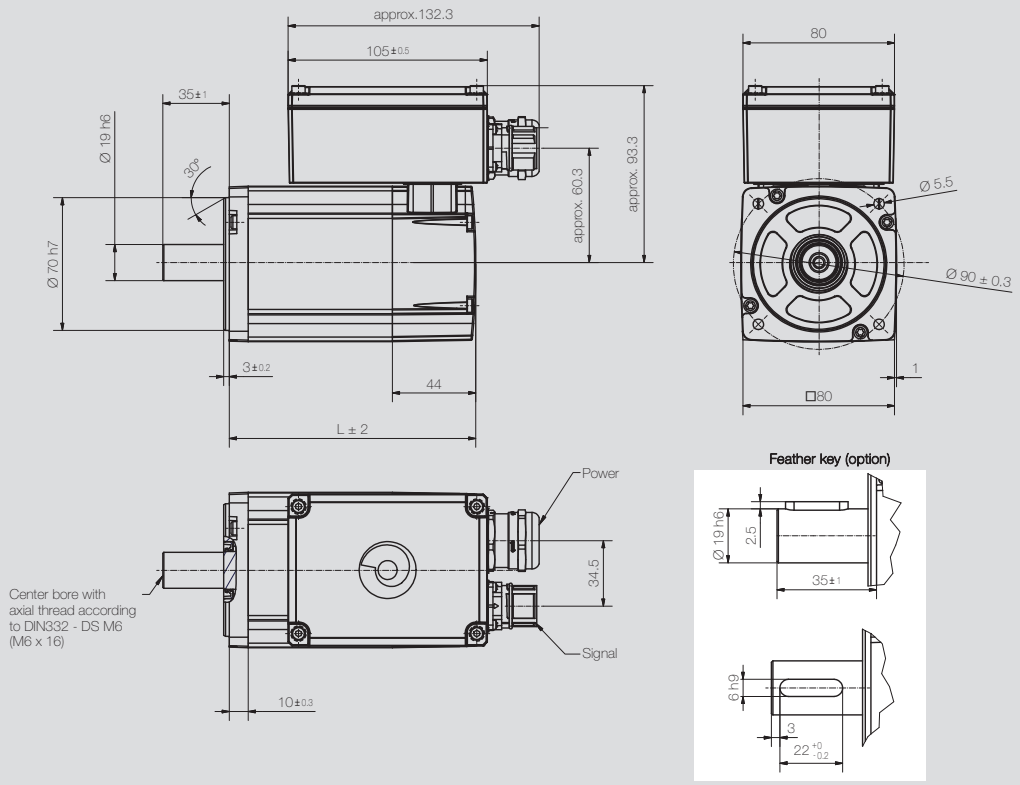

Motor	L [mm] without brake	L [mm] with brake
HMD08-024	130 mm	178.5 mm

HMD08-024-048-55-*

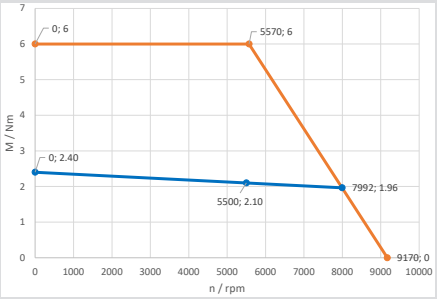

HMD08-024

320 / 560 V

Specifications

		HMD08-024			
Rated speed [rpm]	n_n	3,000	5,500	3,000	5,500
Number of pole pairs		5	5	5	5
Wiring of the motor winding		Y	Y	Y	Y
DC bus voltage [V_{DC}]	U_{bus}	320	320	560	560
Rated voltage motor [V_{rms}]	U_{mot}	187.8	189.0	329.0	323.0
Rated power [W]	P_n	720	1,210	720	1,210
Rated torque [Nm]	M_n	2.3	2.1	2.3	2.1
Rated current per phase [A_{rms}]	I_n	2.8	4.9	1.8	2.9
Stall torque [Nm]	**M_0**	**2.4**	**2.4**	**2.4**	**2.4**
Stall current per phase [A_{rms}]	I_0	3.2	5.4	1.9	3.2
Peak torque [Nm]	M_{max}	6.0	6.0	6.0	6.0
Peak current [A_{rms}]	I_{max}	10.2	16.1	5.6	10.2
Maximum speed [rpm]	n_{max}	4,560	7,800	4,500	7,980
Voltage constant at 1.000 rpm [V_{rms}]	k_e	48.6	28.4	83.5	48.6
Torque constant [Nm / A_{rms}]	k_t	0.738	0.430	1.260	0.735
Winding resistance (2 phases) at 20 °C [Ω]	R_{pp}	6.0	2.2	19.8	6.0
Winding inductance (2 phases) [mH]	L_{pp}	14.4	5.0	45.7	14.4
Electrical time constant [ms]	T_{el}	2.4	2.3	2.3	2.4
Thermal time constant [min]	T_{th}	30	30	30	30
Moment of inertia rotor [kg-cm²]	J	8.00E-01	8.00E-01	8.00E-01	8.00E-01
Weight of motor [kg]	m	2.5	2.5	2.5	2.5

For standstill / rated current greater than 30 A, observe connection technology (Page 78) and encoder selection (Page 76)!
Other voltage variants available on request.
All nominal values with resolver.

Performance

HMD08-024-320-30-*

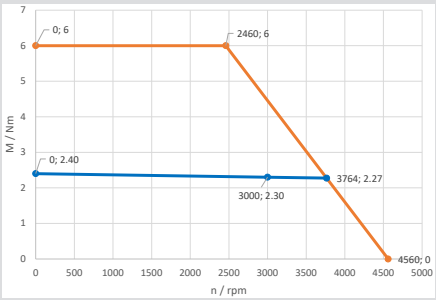

HMD08-024-320-55-*

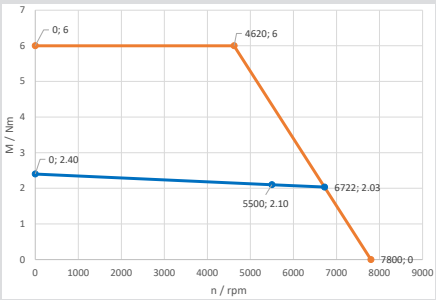

M max
M (S1)

Dimensions

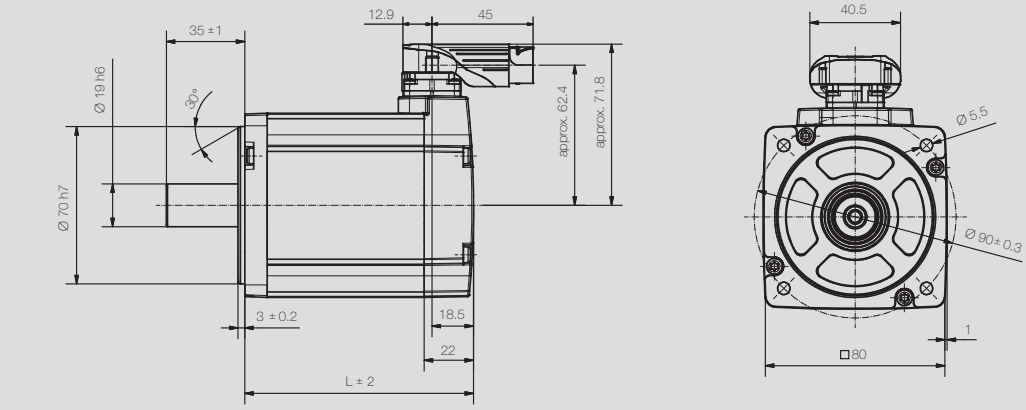

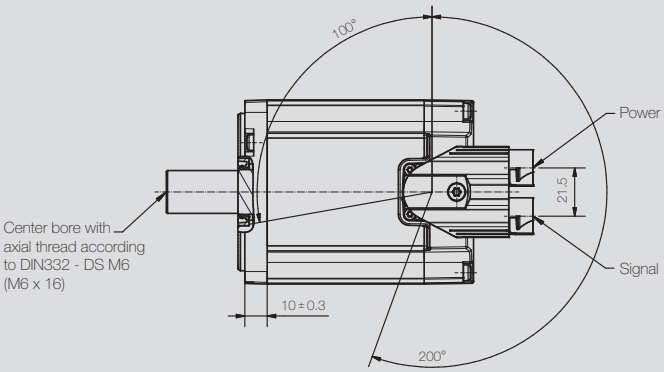

Feather key (option)

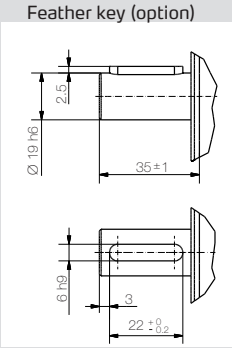

Motor	L [mm] *with encoder category 1** without brake	L [mm] *with encoder category 1** with brake	L [mm] *with encoder category 2** without brake	L [mm] *with encoder category 2** with brake
HMD08-024	108 mm	156.5 mm	130 mm	178.5 mm

** Encoder category 1: Resolver, ECI1118, SEK/SEL37, HESx/HEMx, AM 34; only for variants with U_{bus} = 320/560 V_{DC}*
Encoder category 2: Remaining encoders

HMD08-024-560-30-*

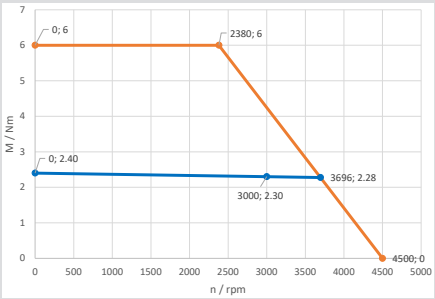

HMD08-024-560-55-*

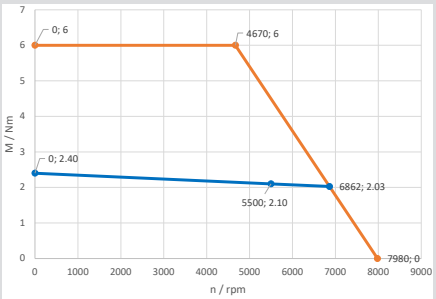

HMD08-032

24 / 48 V

Specifications

		HMD08-032		
Rated speed [rpm]	n_n	3,000	3,000	5,500
Number of pole pairs		5	5	5
Wiring of the motor winding		Y	Y	Y
DC bus voltage [V_{DC}]	U_{bus}	24	48	48
Rated voltage motor [V_{rms}]	U_{mot}	14.3	27.2	24.6
Rated power [W] [1]	P_n	940	940	1,500
Rated torque [Nm]	M_n	3.0	3.0	2.6
Rated current per phase [A_{rms}]	I_n	50.3	26.6	44.9
Stall torque [Nm]	M_0	3.2	3.2	3.2
Stall current per phase [A_{rms}]	I_0	52.2	27.6	52.2
Peak torque [Nm]	M_{max}	8.0	8.0	8.0
Peak current [A_{rms}]	I_{max}	163.0	86.3	163.0
Maximum speed [rpm]	n_{max}	3,720	4,000	7,610
Voltage constant at 1.000 rpm [V_{rms}]	k_e	3.9	7.4	3.9
Torque constant [Nm / A_{rms}]	k_t	0.060	0.113	0.058
Winding resistance (2 phases) at 20 °C [Ω]	R_{p-p}	0.0	0.1	0.0
Winding inductance (2 phases) [mH]	L_{p-p}	0.1	0.2	0.1
Electrical time constant [ms]	t_{el}	2.8	2.8	2.8
Thermal time constant [min]	t_{th}	30	30	30
Moment of inertia rotor [kg-cm²]	J	1.13E+00	1.13E+00	1.13E+00
Weight of motor [kg]	m	2.9	2.9	2.9

For standstill / rated current greater than 30 A, observe connection technology (Page 78) and encoder selection (Page 76)!
Other voltage variants available on request.
All nominal values with resolver.

Performance

HMD08-032-024-30-*

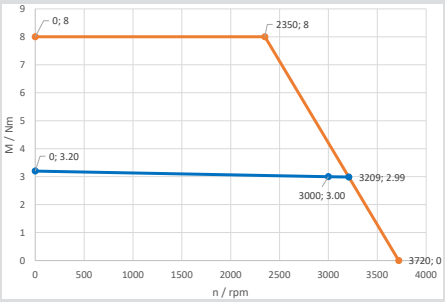

HMD08-032-048-30-*

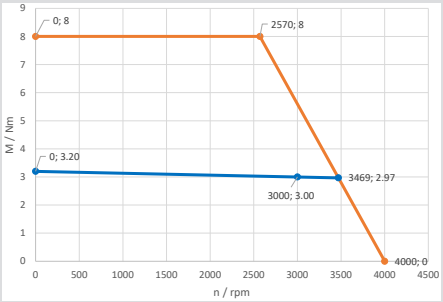

M max
M (S1)

[1] For UL approval, an S1 characteristic curve deviating by approx. 15 % applies. The specifications on the nameplates correspond to the UL values..

Dimensions

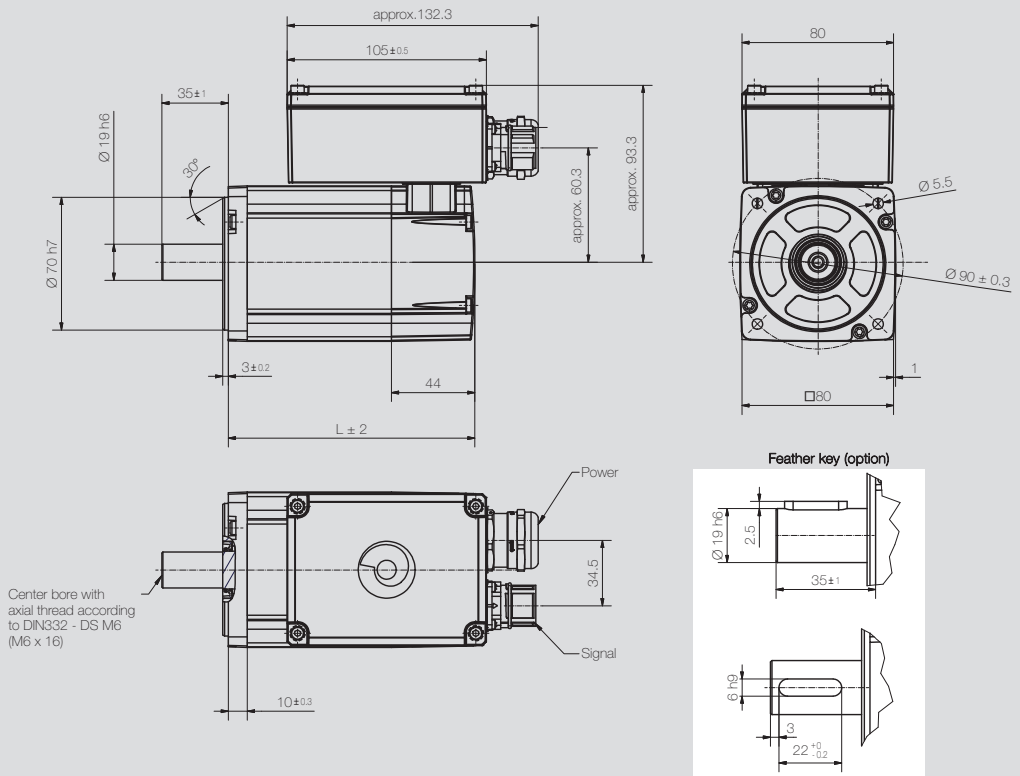

Motor	L [mm] without brake	L [mm] with brake
HMD08-032	145 mm	193.5 mm

HMD08-032-048-55-*

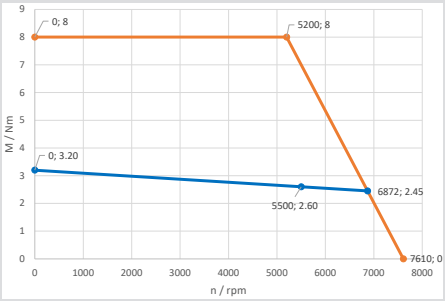

HMD08-032

320 / 560 V

Specifications

		HMD08-032			
Rated speed [rpm]	n_n	3,000	5,500	3,000	5,500
Number of pole pairs		5	5	5	5
Wiring of the motor winding		Y	Y	Y	Y
DC bus voltage [V_{DC}]	U_{bus}	320	320	560	560
Rated voltage motor [V_{rms}]	U_{mot}	172.0	171.0	309.0	327.0
Rated power [W]	P_n	940	1,500	940	1,500
Rated torque [Nm]	M_n	3.0	2.6	3.0	2.6
Rated current per phase [A_{rms}]	I_n	4.2	6.0	2.3	3.6
Stall torque [Nm]	**M_0**	**3.2**	**3.2**	**3.2**	**3.2**
Stall current per phase [A_{rms}]	I_0	4.3	7.2	2.4	4.3
Peak torque [Nm]	M_{max}	8.0	8.0	8.0	8.0
Peak current [A_{rms}]	I_{max}	13.2	21.2	6.8	13.2
Maximum speed [rpm]	n_{max}	4,490	7,355	4,120	7,475
Voltage constant at 1.000 rpm [V_{rms}]	k_e	48.6	28.0	84.9	48.6
Torque constant [Nm / A_{rms}]	k_t	0.722	0.432	1.310	0.723
Winding resistance (2 phases) at 20 °C [Ω]	R_{p-p}	3.5	1.2	12.2	3.5
Winding inductance (2 phases) [mH]	L_{p-p}	10.0	3.3	34.4	10.0
Electrical time constant [ms]	t_{el}	2.9	2.9	2.8	2.9
Thermal time constant [min]	t_{th}	30	30	30	30
Moment of inertia rotor [kg-cm²]	J	1.13E+00	1.13E+00	1.13E+00	1.13E+00
Weight of motor [kg]	m	2.9	2.9	2.9	2.9

For standstill / rated current greater than 30 A, observe connection technology (Page 78) and encoder selection (Page 76)!
Other voltage variants available on request.
All nominal values with resolver.

Performance

HMD08-032-320-30-*

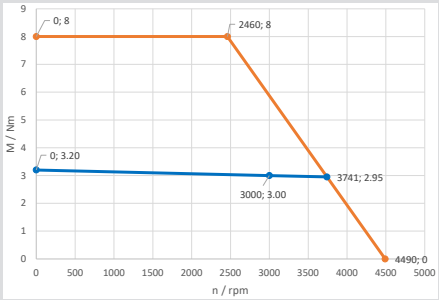

HMD08-032-320-55-*

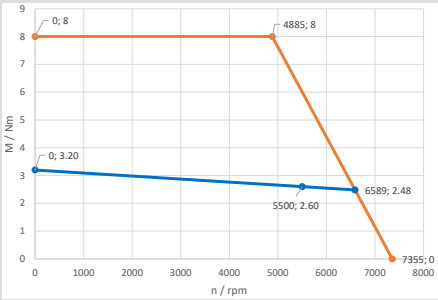

M max
M (S1)

Dimensions

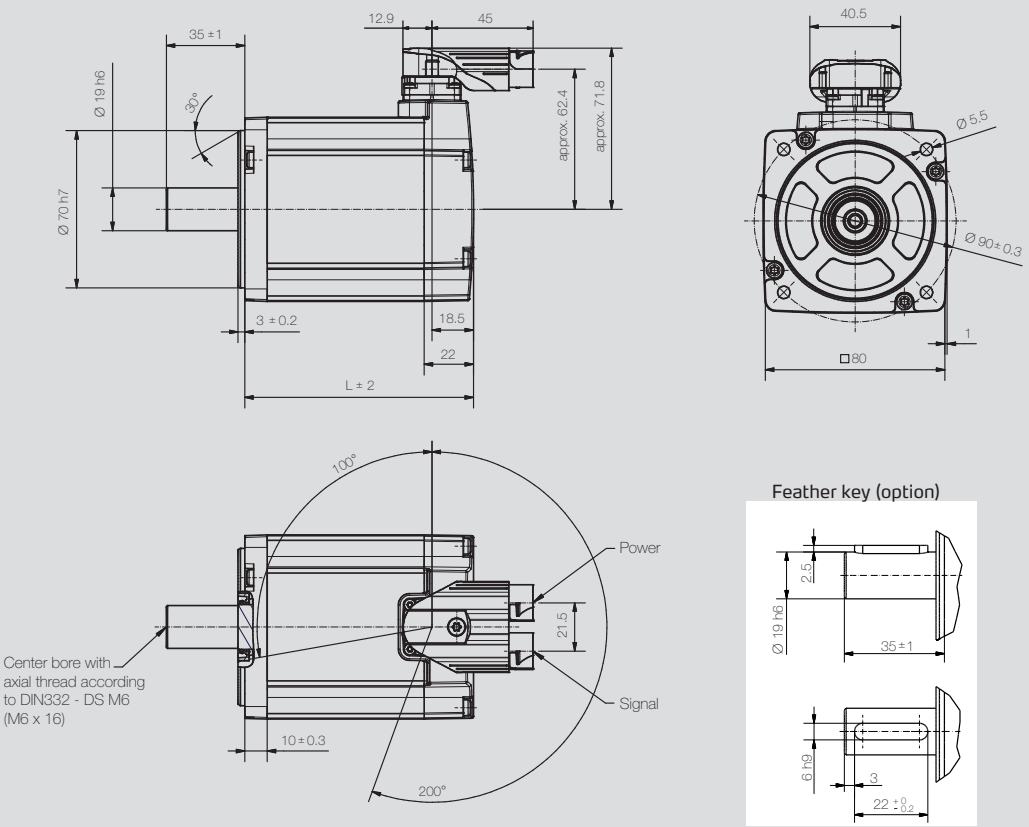

Motor	L [mm] *with encoder category 1** without brake	L [mm] *with encoder category 1** with brake	L [mm] *with encoder category 2** without brake	L [mm] *with encoder category 2** with brake
HMD08-032	123 mm	171.5 mm	145 mm	193.5 mm

** Encoder category 1: Resolver, ECI1118, SEK/SEL37, HESx/HEMx,AM 34; only for variants with U_{bus} = 320/560 V_{DC}*
Encoder category 2: Remaining encoders

HMD08-032-560-30-*

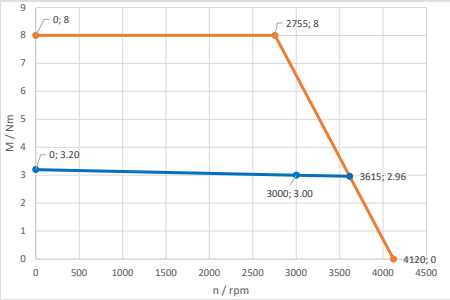

HMD08-032-560-55-*

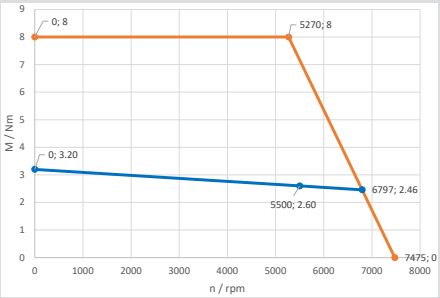

HMD08-042

24 / 48 V

Specifications

		HMD08-042		
Rated speed [rpm]	n_n	3,000	3,000	5,500
Number of pole pairs		5	5	5
Wiring of the motor winding		Y	Y	Y
DC bus voltage [V_{DC}]	U_{bus}	24	48	48
Rated voltage motor [V_{rms}]	U_{mot}	14.8	27.4	25.6
Rated power [W] [1]	P_n	1,225	1,225	1,950
Rated torque [Nm]	M_n	3.9	3.9	3.4
Rated current per phase [A_{rms}]	I_n	59.9	32.3	54.0
Stall torque [Nm]	M_0	4.2	4.2	4.2
Stall current per phase [A_{rms}]	I_0	62.4	33.7	62.4
Peak torque [Nm]	M_{max}	10.5	10.5	10.5
Peak current [A_{rms}]	I_{max}	191.0	102.8	190.0
Maximum speed [rpm]	n_{max}	3,550	3,850	7,250
Voltage constant at 1.000 rpm [V_{rms}]	k_e	4.2	7.9	4.2
Torque constant [Nm / A_{rms}]	k_t	0.065	0.121	0.063
Winding resistance (2 phases) at 20 °C [Ω]	R_{p-p}	0.0	0.1	0.0
Winding inductance (2 phases) [mH]	L_{p-p}	0.1	0.2	0.1
Electrical time constant [ms]	t_{el}	3.1	3.2	3.1
Thermal time constant [min]	t_{th}	30	30	30
Moment of inertia rotor [kg-cm²]	J	1.46E+00	1.46E+00	1.46E+00
Weight of motor [kg]	m	3.3	3.3	3.3

For standstill / rated current greater than 30 A, observe connection technology (Page 78) and encoder selection (Page 76)!
Other voltage variants available on request.
All nominal values with resolver.

Performance

HMD08-042-024-30-*

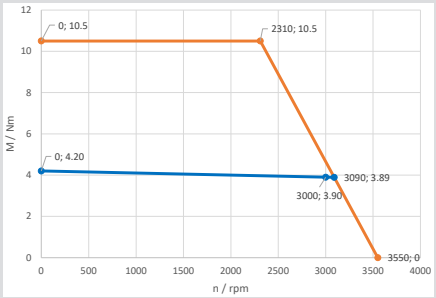

HMD08-042-048-30-*

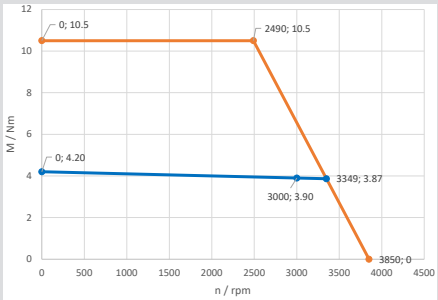

M max
M (S1)

[1] For UL approval, an S1 characteristic curve deviating by approx. 15 % applies. The specifications on the nameplates correspond to the UL values.

Dimensions

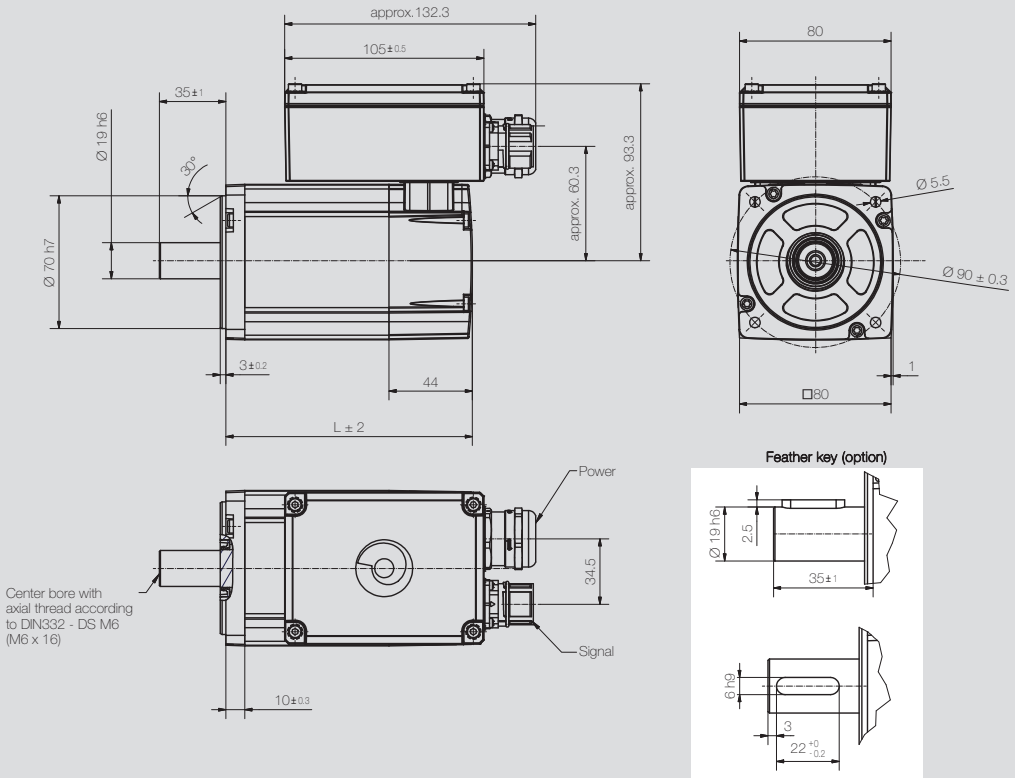

Motor	L [mm] without brake	L [mm] with brake
HMD08-042	160 mm	208.5 mm

HMD08-042-048-55-*

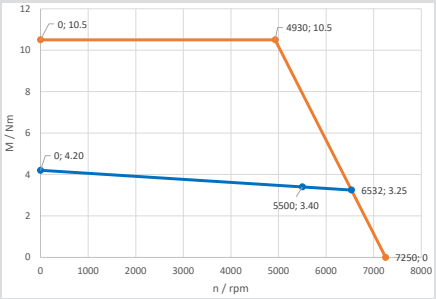

HMD08-042

320 / 560 V

Specifications

		HMD08-042			
Rated speed [rpm]	n_n	3,000	5,500	3,000	5,500
Number of pole pairs		5	5	5	5
Wiring of the motor winding		Y	Y	Y	Y
DC bus voltage [V_{DC}]	U_{bus}	320	320	320	320
Rated voltage motor [V_{rms}]	U_{mot}	186.0	179.0	340.0	317.0
Rated power [W]	P_n	1,225	1,950	1,225	1,950
Rated torque [Nm]	M_n	3.9	3.4	3.9	3.4
Rated current per phase [A_{rms}]	I_n	4.7	7.20	2.6	4.3
Stall torque [Nm]	M_0	4.2	4.2	4.2	4.2
Stall current per phase [A_{rms}]	I_0	5.0	8.6	2.7	5.0
Peak torque [Nm]	M_{max}	10.5	10.5	10.5	10.5
Peak current [A_{rms}]	I_{max}	14.4	25.2	7.7	14.4
Maximum speed [rpm]	n_{max}	3,930	6,890	3,905	6,970
Voltage constant at 1.000 rpm [V_{rms}]	k_e	53.3	30.6	98.0	53.3
Torque constant [Nm / A_{rms}]	k_t	0.823	0.472	1.530	0.799
Winding resistance (2 phases) at 20 °C [Ω]	R_{p-p}	3.0	1.0	10.1	3.0
Winding inductance (2 phases) [mH]	L_{p-p}	9.0	2.8	29.2	9.0
Electrical time constant [ms]	t_{el}	3.0	3.0	2.9	3.0
Thermal time constant [min]	t_{th}	30	30	30	30
Moment of inertia rotor [kg-cm²]	J	1.46E+00	1.46E+00	1.46E+00	1.46E+00
Weight of motor [kg]	m	3.3	3.3	3.3	3.3

For standstill / rated current greater than 30 A, observe connection technology (Page 78) and encoder selection (Page 76)!
Other voltage variants available on request.
All nominal values with resolver.

Performance

HMD08-042-320-30-*

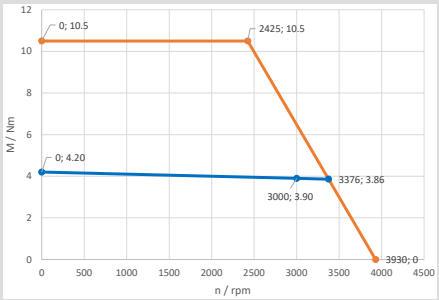

HMD08-042-320-55-*

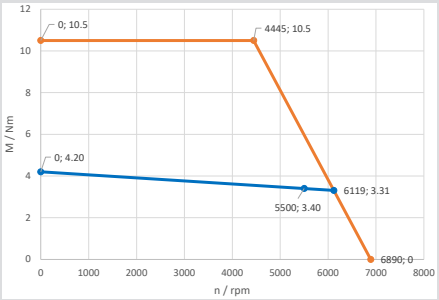

M max
M (S1)

Dimensions

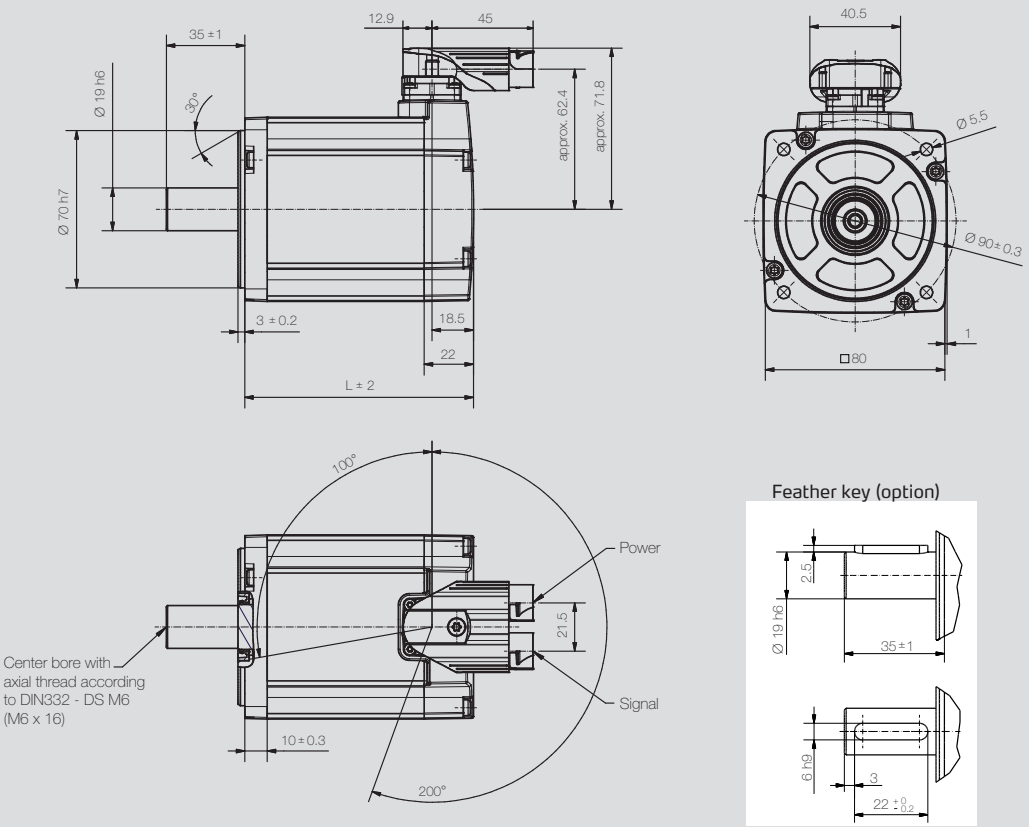

Motor	L [mm] *with encoder category 1** without brake	L [mm] *with encoder category 1** with brake	L [mm] *with encoder category 2** without brake	L [mm] *with encoder category 2** with brake
HMD08-042	138 mm	186.5 mm	160 mm	208.5 mm

** Encoder category 1: Resolver, ECI1118, SEK/SEL37, HESx/HEMx, AM 34; only for variants with U_{bus} = 320/560 V_{DC}*
Encoder category 2: Remaining encoders

HMD08-042-560-30-*

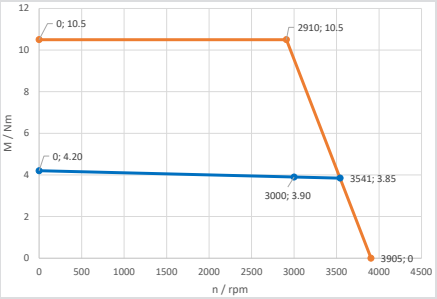

HMD08-042-560-55-*

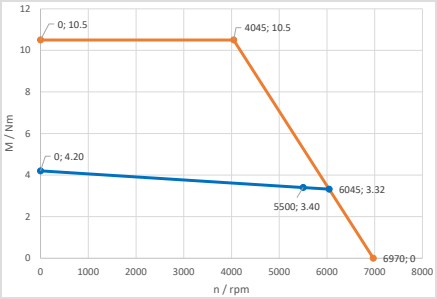

HMD08-057

48 V

Specifications

		HMD08-057
Rated speed [rpm]	n_n	3,000
Number of pole pairs		5
Wiring of the motor winding		Y
DC bus voltage [V_{DC}]	U_{bus}	48
Rated voltage motor [V_{rms}]	U_{mot}	24.8
Rated power [W] [1)]	P_n	1,665
Rated torque [Nm]	M_n	5.3
Rated current per phase [A_{rms}]	I_n	54.8
Stall torque [Nm]	M_0	5.7
Stall current per phase [A_{rms}]	I_0	47.7
Peak torque [Nm]	M_{max}	14.3
Peak current [A_{rms}]	I_{max}	139.0
Maximum speed [rpm]	n_{max}	4,100
Voltage constant at 1.000 rpm [V_{rms}]	k_e	7.5
Torque constant [Nm / A_{rms}]	k_t	0.116
Winding resistance (2 phases) at 20 °C [Ω]	R_{p-p}	0.0
Winding inductance (2 phases) [mH]	L_{p-p}	0.1
Electrical time constant [ms]	t_{el}	3.3
Thermal time constant [min]	t_{th}	30
Moment of inertia rotor [kg-cm²]	J	2.12E+00
Weight of motor [kg]	m	4.4

For standstill / rated current greater than 30 A, observe connection technology (Page 78) and encoder selection (Page 76)!
Other voltage variants available on request.
All nominal values with resolver.

Performance

HMD08-057-048-30-*

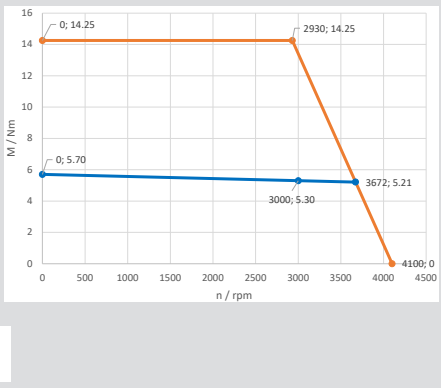

[1)] For UL approval, an S1 characteristic curve deviating by approx. 15 % applies. The specifications on the nameplates correspond to the UL values..

Dimensions

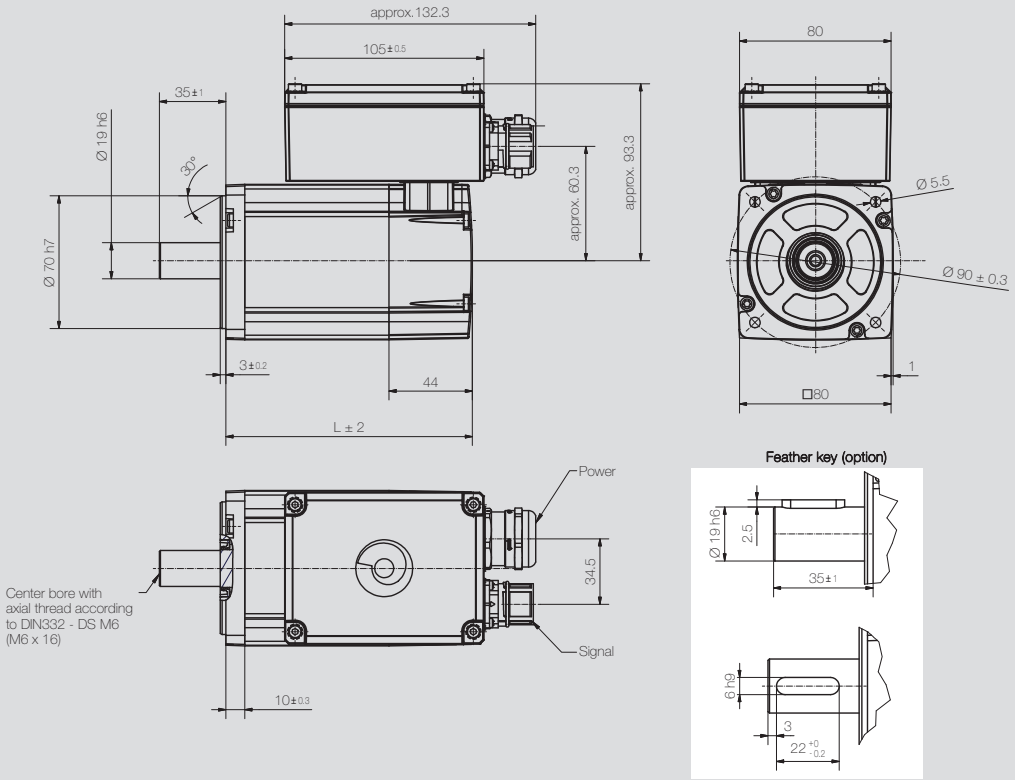

Motor	L [mm] *with encoder category 2** without brake	with brake
HMD08-057	190 mm	238.5 mm

HMD08-057

320 / 560 V

Specifications

		HMD08-057			
Rated speed [rpm]	n_n	3,000	5,500	3,000	5,500
Number of pole pairs		5	5	5	5
Wiring of the motor winding		Y	Y	Y	Y
DC bus voltage [V_{DC}]	U_{bus}	320	320	560	560
Rated voltage motor [V_{rms}]	U_{mot}	182.0	181.0	341.0	311.0
Rated power [W]	P_n	1,665	2,480	1,665	2,480
Rated torque [Nm]	M_n	5.3	4.3	5.3	4.3
Rated current per phase [A_{rms}]	I_n	6.1	8.8	3.3	5.1
Stall torque [Nm]	M_0	5.7	5.7	5.7	5.7
Stall current per phase [A_{rms}]	I_0	6.5	11.2	3.4	6.5
Peak torque [Nm]	M_{max}	14.3	14.3	14.3	14.3
Peak current [A_{rms}]	I_{max}	18.0	31.0	9.6	18.0
Maximum speed [rpm]	n_{max}	3,735	6,360	3,585	6,740
Voltage constant at 1.000 rpm [V_{rms}]	k_e	54.8	32.2	103.0	54.9
Torque constant [Nm / A_{rms}]	k_t	0.864	0.491	1.630	0.846
Winding resistance (2 phases) at 20 °C [Ω]	R_{p-p}	1.7	0.6	6.2	1.8
Winding inductance (2 phases) [mH]	L_{p-p}	6.0	2.0	20.7	6.0
Electrical time constant [ms]	t_{el}	3.4	3.3	3.2	3.4
Thermal time constant [min]	t_{th}	30	30	30	30
Moment of inertia rotor [kg-cm²]	J	2.12E+00	2.12E+00	2.12E+00	2.12E+00
Weight of motor [kg]	m	4.4	4.4	4.4	4.4

For standstill / rated current greater than 30 A, observe connection technology (Page 78) and encoder selection (Page 76)!
Other voltage variants available on request.
All nominal values with resolver.

Performance

HMD08-057-320-30-*

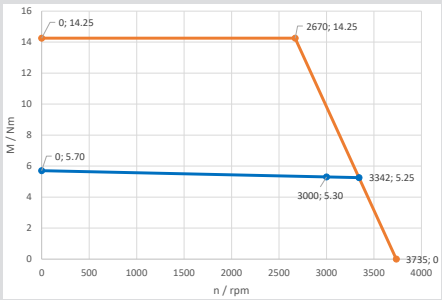

HMD08-057-320-55-*

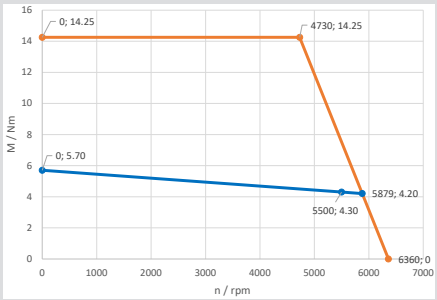

M max
M (S1)

Dimensions

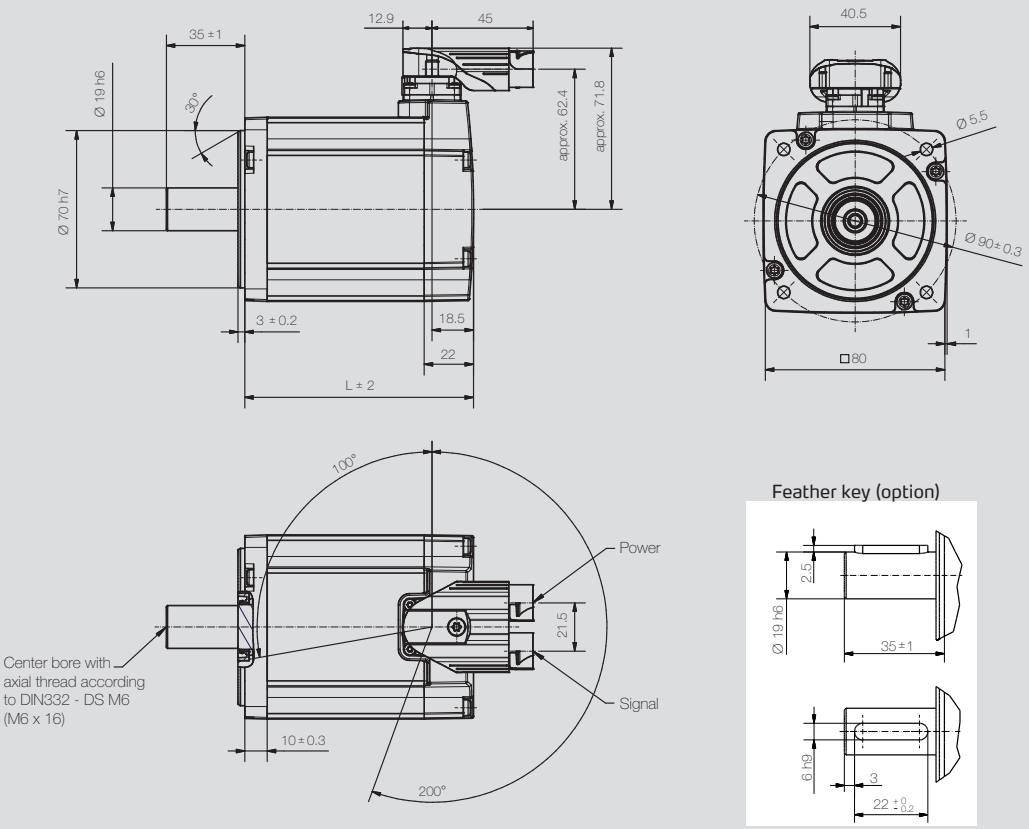

Motor	L [mm] *with encoder category 1** without brake	L [mm] *with encoder category 1** with brake	L [mm] *with encoder category 2** without brake	L [mm] *with encoder category 2** with brake
HMD08-057	168 mm	216.5 mm	190 mm	238.5 mm

** Encoder category 1: Resolver, ECI1118, SEK/SEL37, HESx/HEMx, AM 34; only for variants with U_{bus} = 320/560 V_{DC}*
Encoder category 2: Remaining encoders

HMD08-057-560-30-*

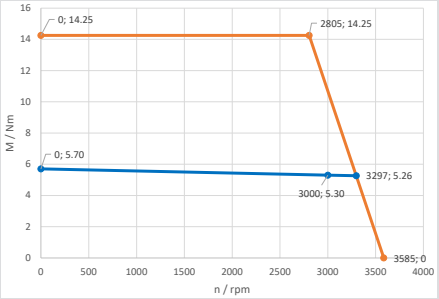

HMD08-057-560-55-*

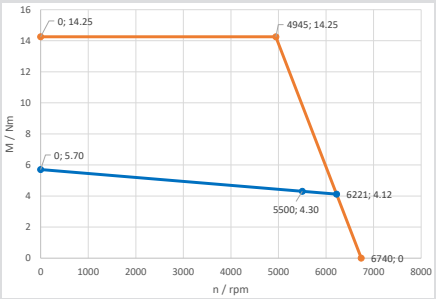

HMD10-039

48 V

Specifications

		HMD10-039	
Rated speed [rpm]	n_n	3,000	5,000
Number of pole pairs		5	5
Wiring of the motor winding		Y	Y
DC bus voltage [V_{DC}]	U_{bus}	48	48
Rated voltage motor [V_{rms}]	U_{mot}	23.5	23.4
Rated power [W] [1)]	P_n	1,130	1,675
Rated torque [Nm]	M_n	3.6	3.2
Rated current per phase [A_{rms}]	I_n	32.9	48.5
Stall torque [Nm]	M_0	3.9	3.9
Stall current per phase [A_{rms}]	I_0	34.6	56.0
Peak torque [Nm]	M_{max}	9.8	9.8
Peak current [A_{rms}]	I_{max}	86.5	140.0
Maximum speed [rpm]	n_{max}	4,390	7,090
Voltage constant at 1,000 rpm [V_{rms}]	k_e	7.1	4.4
Torque constant [Nm / A_{rms}]	k_t	0.11	0.07
Winding resistance (2 phases) at 20 °C [Ω]	R_{p-p}	0.056	0.021
Winding inductance (2 phases) [mH]	L_{p-p}	0.16	0.062
Electrical time constant [ms]	t_{el}	2.9	3.0
Thermal time constant [min]	t_{th}	30	30
Moment of inertia rotor [kg-cm²]	J	1.94E+00	1.94E+00
Weight of motor [kg]	m	4.5	4.5

All nominal values with resolver.

Performance

HMD10-039-048-30-*

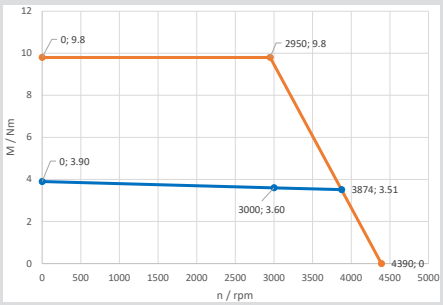

HMD10-039-048-50-*

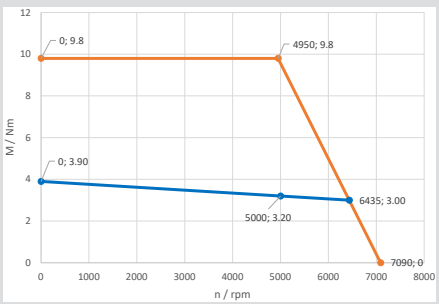

M max
M (S1)

[1)] For UL approval, an S1 characteristic curve deviating by approx. 15 % applies. The specifications on the nameplates correspond to the UL values..

Dimensions

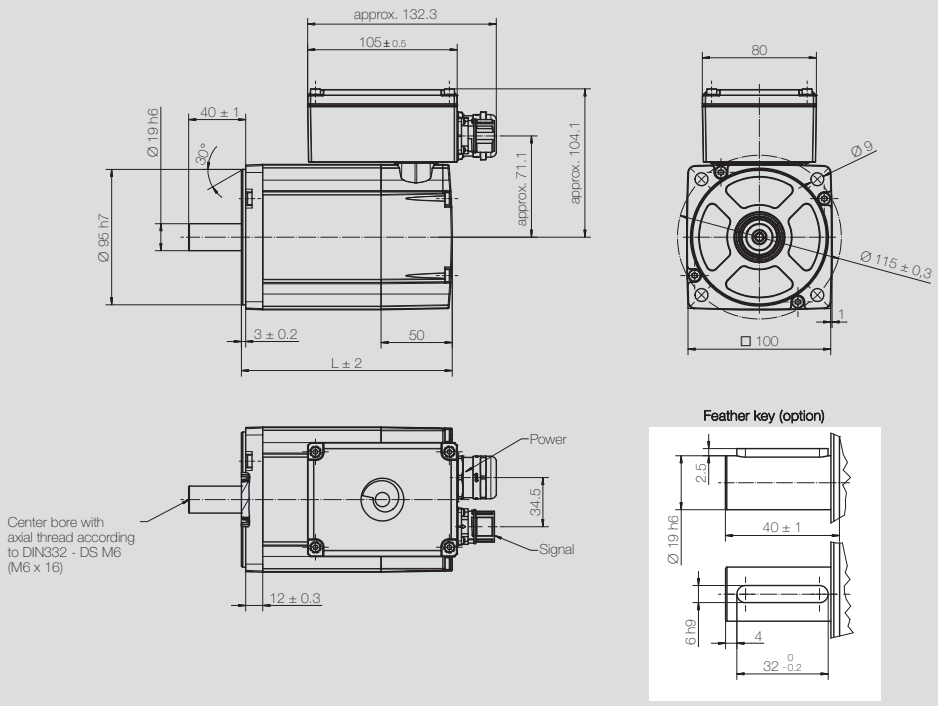

Motor	L [mm] without brake	L [mm] with brake
HMD10-039	145 mm	192 mm

HMD10-039

320 / 560 V

Specifications

		HMD10-039			
Rated speed [rpm]	n_n	3,000	5,000	3,000	5,000
Number of pole pairs		5	5	5	5
Wiring of the motor winding		Y	Y	Y	Y
DC bus voltage [V_{DC}]	U_{bus}	320	320	560	560
Rated voltage motor [V_{rms}]	U_{mot}	163	162	289	263
Rated power [W]	P_n	1,130	1,675	1,130	1,675
Rated torque [Nm]	M_n	3.6	3.2	3.6	3.2
Rated current per phase [A_{rms}]	I_n	4.7	7.0	2.7	4.3
Stall torque [Nm]	M_0	3.9	3.9	3.9	3.9
Stall current per phase [A_{rms}]	I_0	5.0	8.2	2.8	5.0
Peak torque [Nm]	M_{max}	9.8	9.8	9.8	9.8
Peak current [A_{rms}]	I_{max}	12.5	20.5	7.0	12.5
Maximum speed [rpm]	n_{max}	4,280	6,860	4,190	7,490
Voltage constant at 1,000 rpm [V_{rms}]	k_e	49.2	30.7	88.0	49.2
Torque constant [Nm / A_{rms}]	k_t	0.77	0.46	1.33	0.74
Winding resistance (2 phases) at 20 °C [Ω]	R_{p-p}	2.6	1.02	8.4	2.6
Winding inductance (2 phases) [mH]	L_{p-p}	7.8	2.9	24.4	7.8
Electrical time constant [ms]	t_{el}	3.0	2.9	2.9	3.0
Thermal time constant [min]	t_{th}	30	30	30	30
Moment of inertia rotor [kg-cm²]	J	1.94E+00	1.94E+00	1.94E+00	1.94E+00
Weight of motor [kg]	m	4.5	4.5	4.5	4.5

All nominal values with resolver.

Performance

HMD10-039-320-30-*

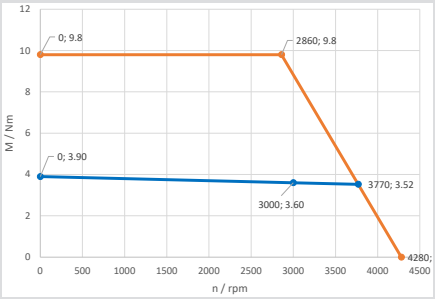

HMD10-039-320-50-*

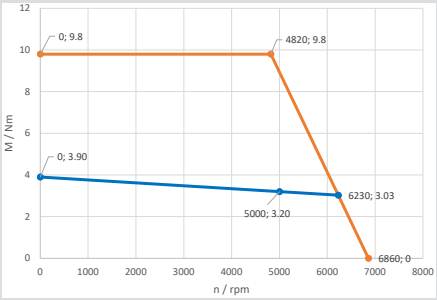

M max
M (S1)

Dimensions

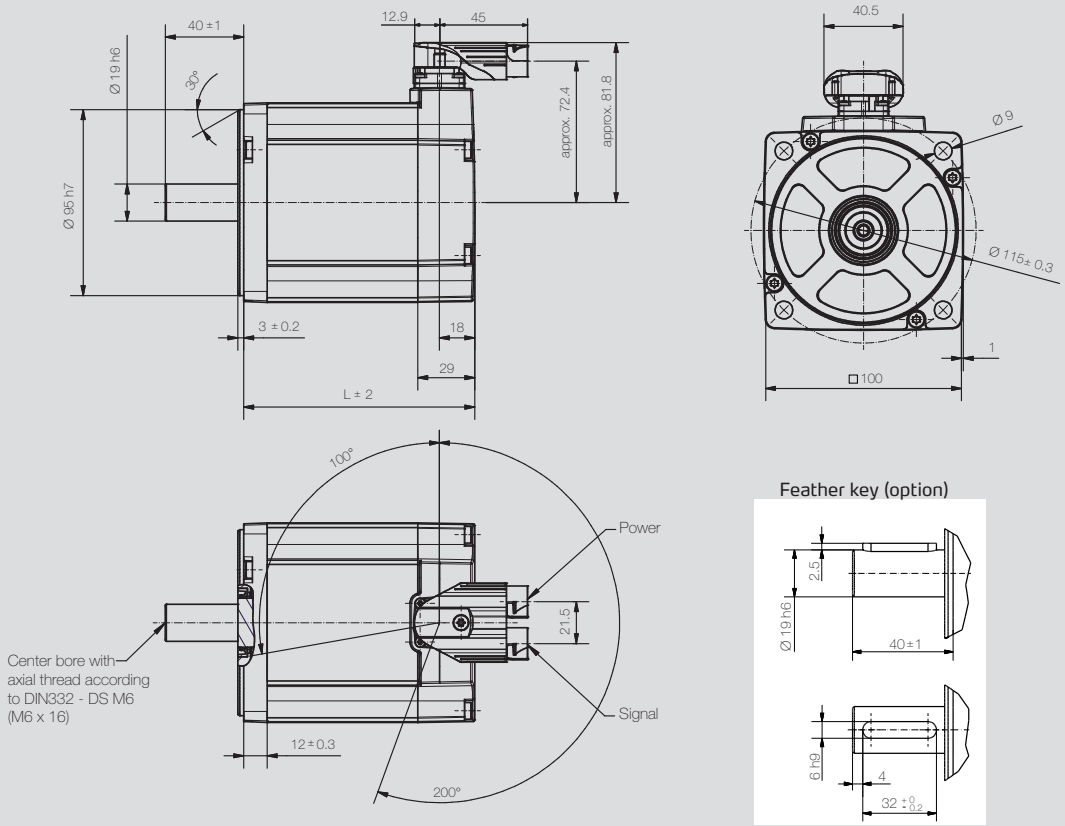

Motor	L [mm] *with encoder category 1** without brake	L [mm] *with encoder category 1** with brake	L [mm] *with encoder category 2** without brake	L [mm] *with encoder category 2** with brake
HMD10-039	124 mm	171 mm	145 mm	192 mm

** Encoder category 1: Resolver, ECI1118, SEK/SEL37, HESx/HEMx, AM 34; only for variants with U_{bus} = 320/560 V_{DC}*
Encoder category 2: Remaining encoders

HMD10-039-560-30-*

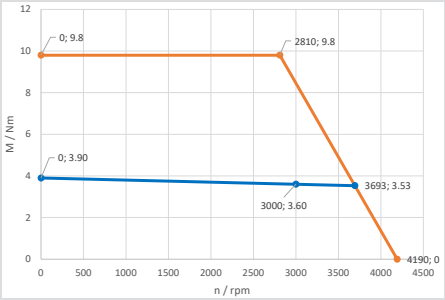

HMD10-039-560-50-*

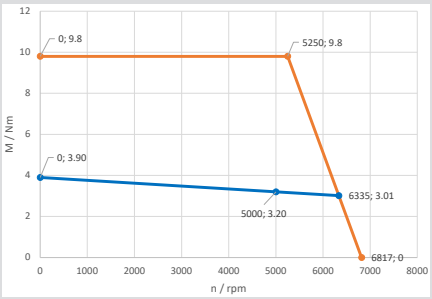

HMD10-057

48 V

Specifications

		HMD10-057	
Rated speed [rpm]	n_n	3,000	5,000
Number of pole pairs		5	5
Wiring of the motor winding		Y	Y
DC bus voltage [V_{DC}]	U_{bus}	48	48
Rated voltage motor [V_{rms}]	U_{mot}	24.9	26.5
Rated power [W] [1)]	P_n	1,635	2,095
Rated torque [Nm]	M_n	5.2	4.0
Rated current per phase [A_{rms}]	I_n	44.4	53.3
Stall torque [Nm]	M_0	5.7	5.7
Stall current per phase [A_{rms}]	I_0	47.1	70.6
Peak torque [Nm]	M_{max}	14.3	14.3
Peak current [A_{rms}]	I_{max}	117.8	176.5
Maximum speed [rpm]	n_{max}	4,100	6,110
Voltage constant at 1,000 rpm [V_{rms}]	k_e	7.6	5.1
Torque constant [Nm / A_{rms}]	k_t	0.12	0.08
Winding resistance (2 phases) at 20 °C [Ω]	R_{p-p}	0.04	0.017
Winding inductance (2 phases) [mH]	L_{p-p}	0.12	0.054
Electrical time constant [ms]	t_{el}	3.0	3.2
Thermal time constant [min]	t_{th}	30	30
Moment of inertia rotor [kg-cm²]	J	2.75E+00	2.75E+00
Weight of motor [kg]	m	5.0	5.0

All nominal values with resolver.

Performance

HMD10-057-048-30-*

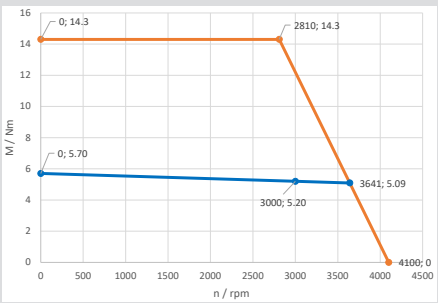

HMD10-057-048-50-*

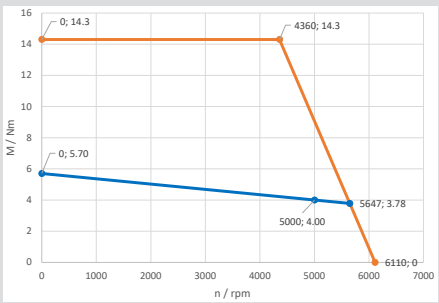

M max
M (S1)

[1)] For UL approval, an S1 characteristic curve deviating by approx. 15 % applies. The specifications on the nameplates correspond to the UL values..

Dimensions

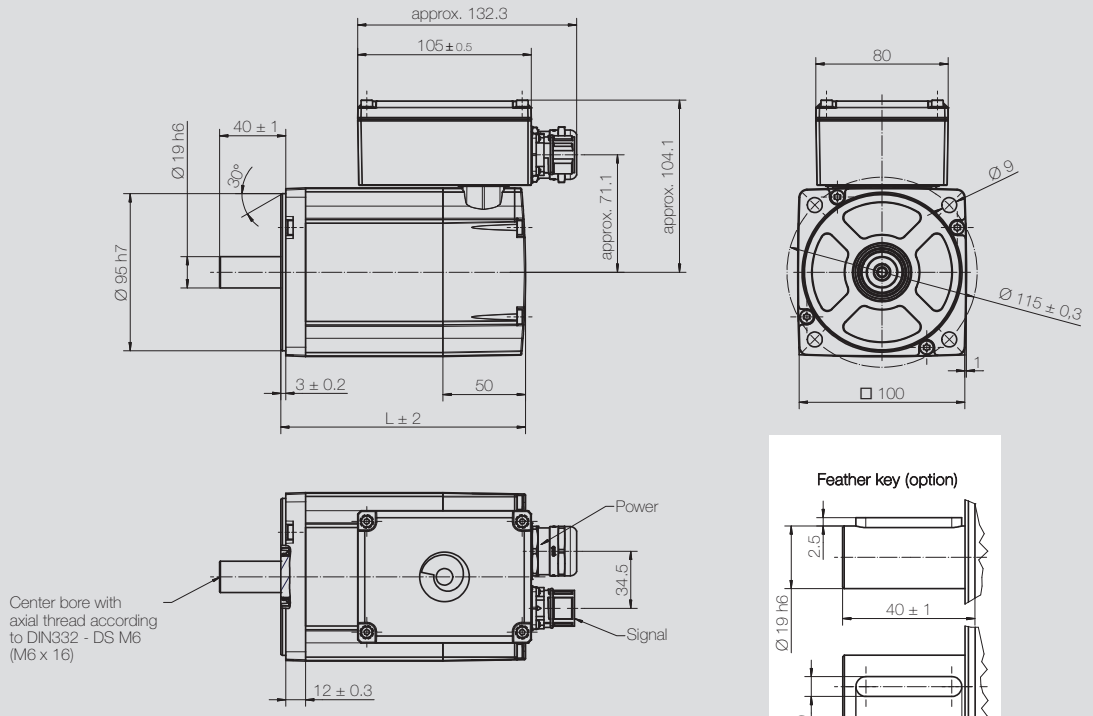

Motor	L [mm] without brake	L [mm] with brake
HMD10-057	160 mm	207 mm

HMD10-057

320 / 560 V

Specifications

		HMD10-057			
Rated speed [rpm]	n_n	3,000	5,000	3,000	5,000
Number of pole pairs		5	5	5	5
Wiring of the motor winding		Y	Y	Y	Y
DC bus voltage [V_{DC}]	U_{bus}	320	320	560	560
Rated voltage motor [V_{rms}]	U_{mot}	177	182	323	284
Rated power [W]	P_n	1,635	2,095	1,635	2,095
Rated torque [Nm]	M_n	5.2	4.0	5.2	4.0
Rated current per phase [A_{rms}]	I_n	6.1	7.6	3.4	4.8
Stall torque [Nm]	M_0	5.7	5.7	5.7	5.7
Stall current per phase [A_{rms}]	I_0	6.5	10.2	3.6	6.5
Peak torque [Nm]	M_{max}	14.3	14.3	14.3	14.3
Peak current [A_{rms}]	I_{max}	16.3	25.5	9.0	16.3
Maximum speed [rpm]	n_{max}	3,790	6,020	3,650	6,630
Voltage constant at 1,000 rpm [V_{rms}]	k_e	55.6	35.0	101.1	55.6
Torque constant [Nm / A_{rms}]	k_t	0.85	0.53	1.53	0.83
Winding resistance (2 phases) at 20 °C [Ω]	R_{p-p}	1.72	0.70	5.6	1.72
Winding inductance (2 phases) [mH]	L_{p-p}	5.5	2.2	18.2	5.5
Electrical time constant [ms]	t_{el}	3.2	3.1	3.3	3.2
Thermal time constant [min]	t_{th}	30	30	30	30
Moment of inertia rotor [kg-cm²]	J	2.75E+00	2.75E+00	2.75E+00	2.75E+00
Weight of motor [kg]	m	5.0	5.0	5.0	5.0

All nominal values with resolver.

Performance

HMD10-057-320-30-*

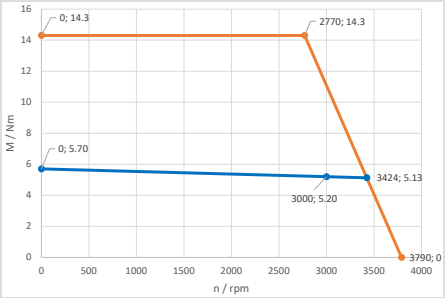

HMD10-057-320-50-*

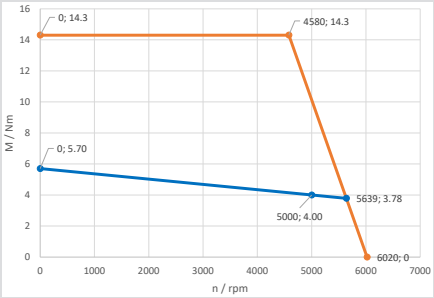

M max
M (S1)

Dimensions

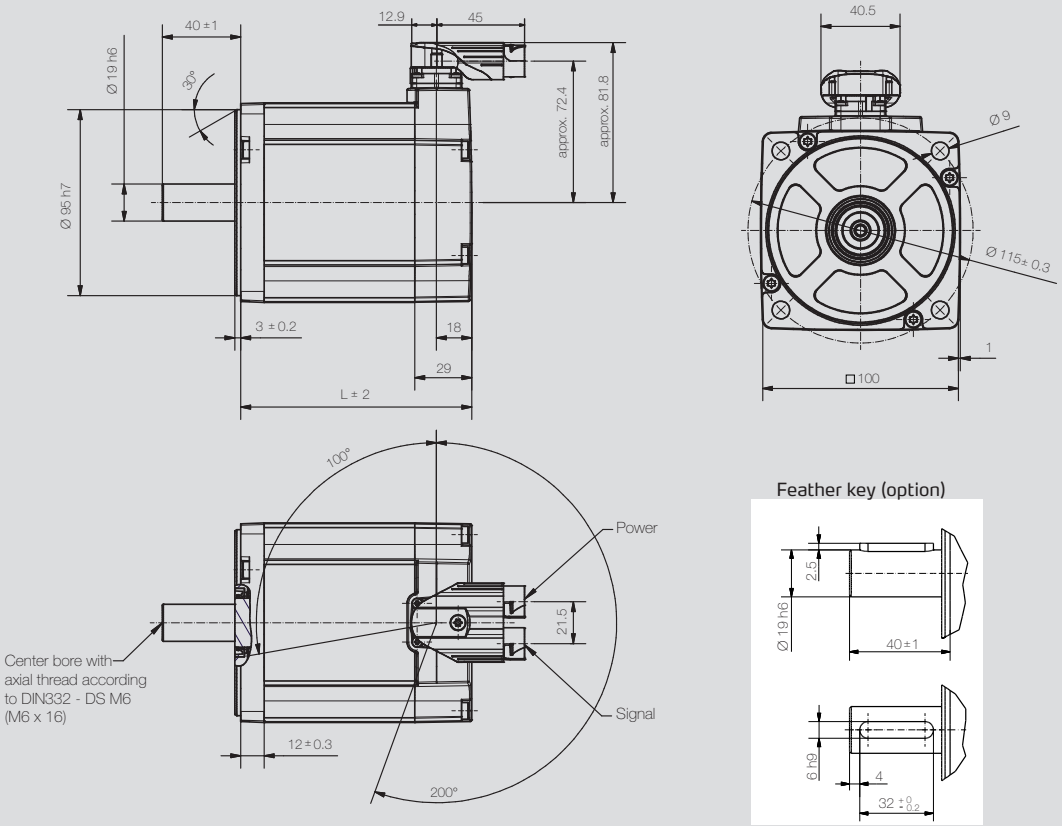

Motor	L [mm] *with encoder category 1** without brake	L [mm] *with encoder category 1** with brake	L [mm] *with encoder category 2** without brake	L [mm] *with encoder category 2** with brake
HMD10-057	139 mm	186 mm	160 mm	207 mm

** Encoder category 1: Resolver, ECI1118, SEK/SEL37, HESx/HEMx, AM 34; only for variants with U_{bus} = 320/560 V_{DC}*
Encoder category 2: Remaining encoders

HMD10-057-560-30-*

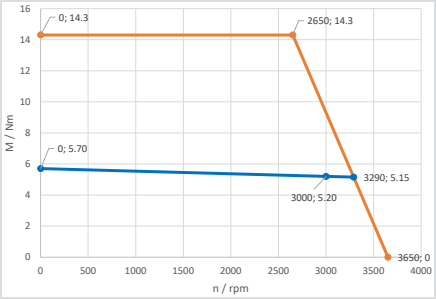

HMD10-057-560-50-*

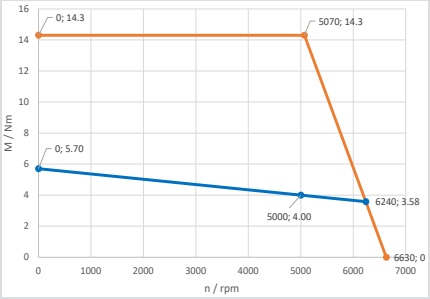

HMD10-076

48 V

Specifications

		HMD10-076
Rated speed [rpm]	n_n	3,000
Number of pole pairs		5
Wiring of the motor winding		Y
DC bus voltage [V_{DC}]	U_{bus}	48
Rated voltage motor [V_{rms}]	U_{mot}	26.6
Rated power [W] [1)]	P_n	2,000
Rated torque [Nm]	M_n	6.5
Rated current per phase [A_{rms}]	I_n	50.3
Stall torque [Nm]	M_0	7.6
Stall current per phase [A_{rms}]	I_0	57.7
Peak torque [Nm]	M_{max}	19.0
Peak current [A_{rms}]	I_{max}	144.3
Maximum speed [rpm]	n_{max}	3,710
Voltage constant at 1,000 rpm [V_{rms}]	k_e	8.4
Torque constant [Nm / A_{rms}]	k_t	0.13
Winding resistance (2 phases) at 20 °C [Ω]	R_{p-p}	0.025
Winding inductance (2 phases) [mH]	L_{p-p}	0.098
Electrical time constant [ms]	t_{el}	3.8
Thermal time constant [min]	t_{th}	35
Moment of inertia rotor [kg-cm²]	J	3.57E+00
Weight of motor [kg]	m	5.5

All nominal values with resolver.

Performance

HMD10-076-048-30-*

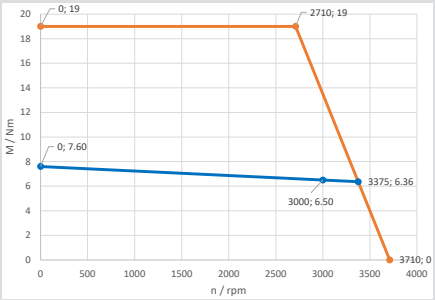

M max
M (S1)

[1)] For UL approval, an S1 characteristic curve deviating by approx. 15 % applies. The specifications on the nameplates correspond to the UL values..

Dimensions

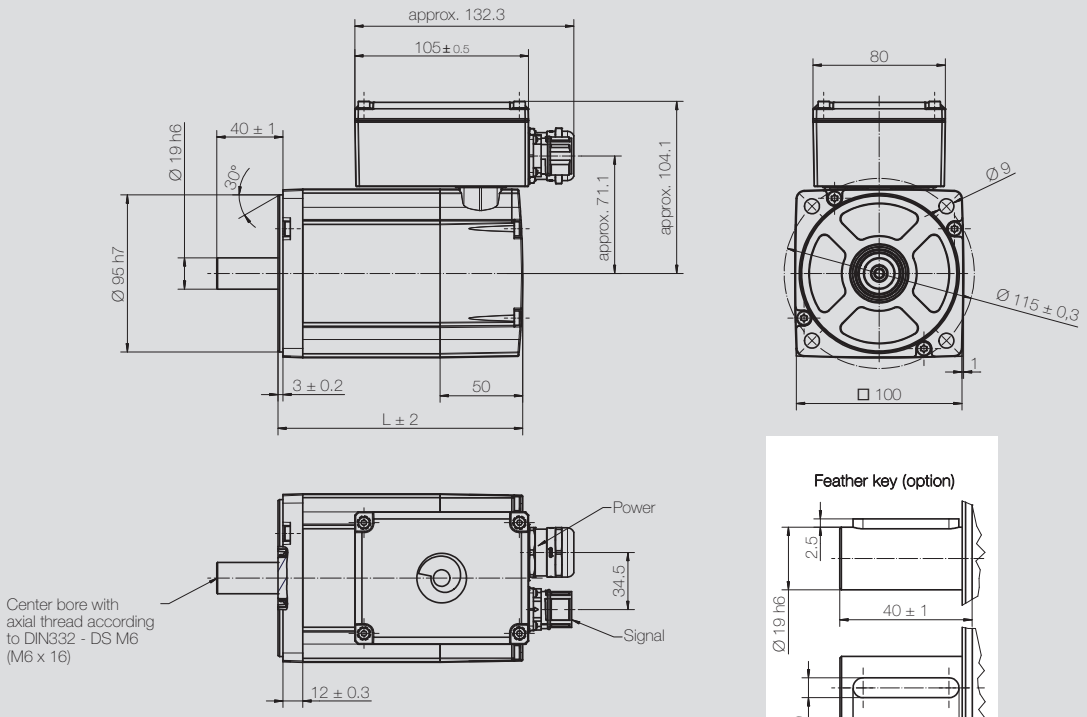

	L [mm]	
Motor	without brake	with brake
HMD10-076	175 mm	222 mm

HMD10-076

320 / 560 V

Specifications

		HMD10-076			
Rated speed [rpm]	n_n	3,000	5,000	3,000	5,000
Number of pole pairs		5	5	5	5
Wiring of the motor winding		Y	Y	Y	Y
DC bus voltage [V_{DC}]	U_{bus}	320	320	560	560
Rated voltage motor [V_{rms}]	U_{mot}	166	176	315	268
Rated power [W]	P_n	2,000	2,500	2,000	2,500
Rated torque [Nm]	M_n	6.5	4.8	6.5	4.8
Rated current per phase [A_{rms}]	I_n	8.0	9.4	4.3	6.3
Stall torque [Nm]	M_0	7.6	7.6	7.6	7.6
Stall current per phase [A_{rms}]	I_0	9.1	13.5	4.9	9.1
Peak torque [Nm]	M_{max}	19.0	19.0	19.0	19.0
Peak current [A_{rms}]	I_{max}	22.8	33.8	12.3	22.8
Maximum speed [rpm]	n_{max}	3,950	6,020	3,720	6,920
Voltage constant at 1,000 rpm [V_{rms}]	k_e	53.3	35.0	99.0	53.3
Torque constant [Nm / A_{rms}]	k_t	0.81	0.51	1.51	0.76
Winding resistance (2 phases) at 20 °C [Ω]	R_{p-p}	1.03	0.44	3.4	1.03
Winding inductance (2 phases) [mH]	L_{p-p}	3.64	1.6	13.0	3.64
Electrical time constant [ms]	t_{el}	3.6	3.6	3.8	3.6
Thermal time constant [min]	t_{th}	35	35	35	35
Moment of inertia rotor [kg-cm²]	J	3.57E+00	3.57E+00	3.57E+00	3.57E+00
Weight of motor [kg]	m	5.5	5.5	5.5	5.5

All nominal values with resolver.

Performance

HMD10-076-320-30-*

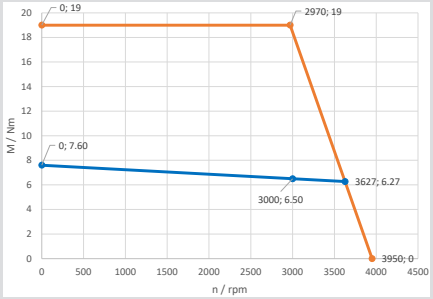

HMD10-076-320-50-*

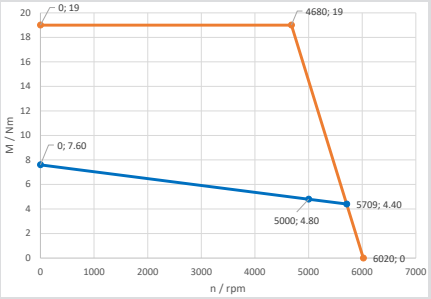

M max
M (S1)

Dimensions

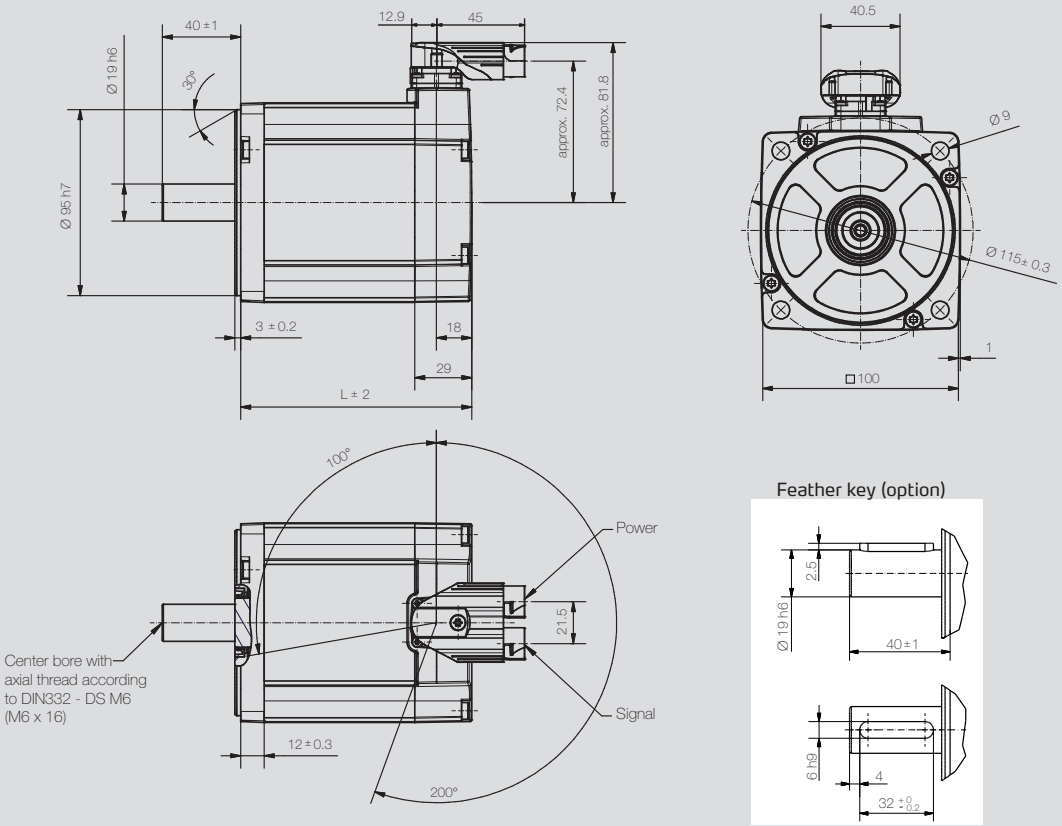

Motor	L [mm] *with encoder category 1** without brake	L [mm] *with encoder category 1** with brake	L [mm] *with encoder category 2** without brake	L [mm] *with encoder category 2** with brake
HMD10-076	154 mm	201 mm	175 mm	222 mm

** Encoder category 1: Resolver, ECI1118, SEK/SEL37, HESx/HEMx, AM 34; only for variants with U_{bus} = 320/560 VDC*
Encoder category 2: Remaining encoders

HMD10-076-560-30-*

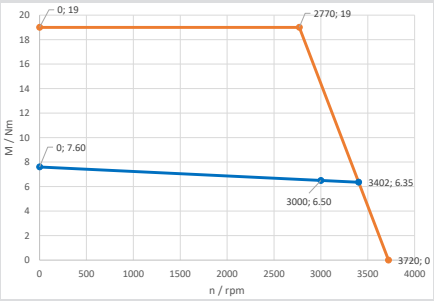

HMD10-076-560-50-*

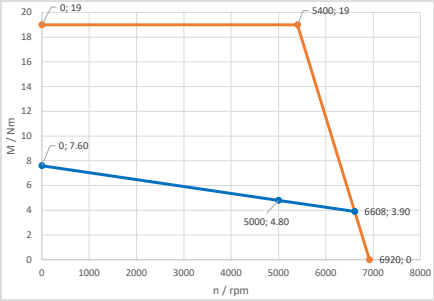

HMD10-105

48 V

Specifications

		HMD10-105
Rated speed [rpm]	n_n	3,000
Number of pole pairs		5
Wiring of the motor winding		Y
DC bus voltage [V_{DC}]	U_{bus}	48
Rated voltage motor [V_{rms}]	U_{mot}	25
Rated power [W] [1)]	P_n	2,700
Rated torque [Nm]	M_n	8.6
Rated current per phase [A_{rms}]	I_n	70.6
Stall torque [Nm]	**M_0**	**10.5**
Stall current per phase [A_{rms}]	I_0	82.3
Peak torque [Nm]	M_{max}	26.3
Peak current [A_{rms}]	I_{max}	205.8
Maximum speed [rpm]	n_{max}	3,850
Voltage constant at 1,000 rpm [V_{rms}]	k_e	8.1
Torque constant [Nm / A_{rms}]	k_t	0.12
Winding resistance (2 phases) at 20 °C [Ω]	R_{p-p}	0.014
Winding inductance (2 phases) [mH]	L_{p-p}	0.057
Electrical time constant [ms]	t_{el}	4.07
Thermal time constant [min]	t_{th}	35
Moment of inertia rotor [kg-cm²]	J	5.21E+00
Weight of motor [kg]	m	6.5

All nominal values with resolver.

Performance

HMD10-105-048-30-*

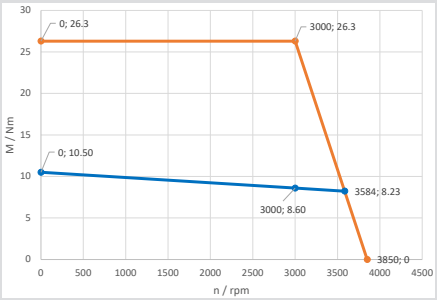

M max
M (S1)

[1)] For UL approval, an S1 characteristic curve deviating by approx. 15 % applies. The specifications on the nameplates correspond to the UL values..

Dimensions

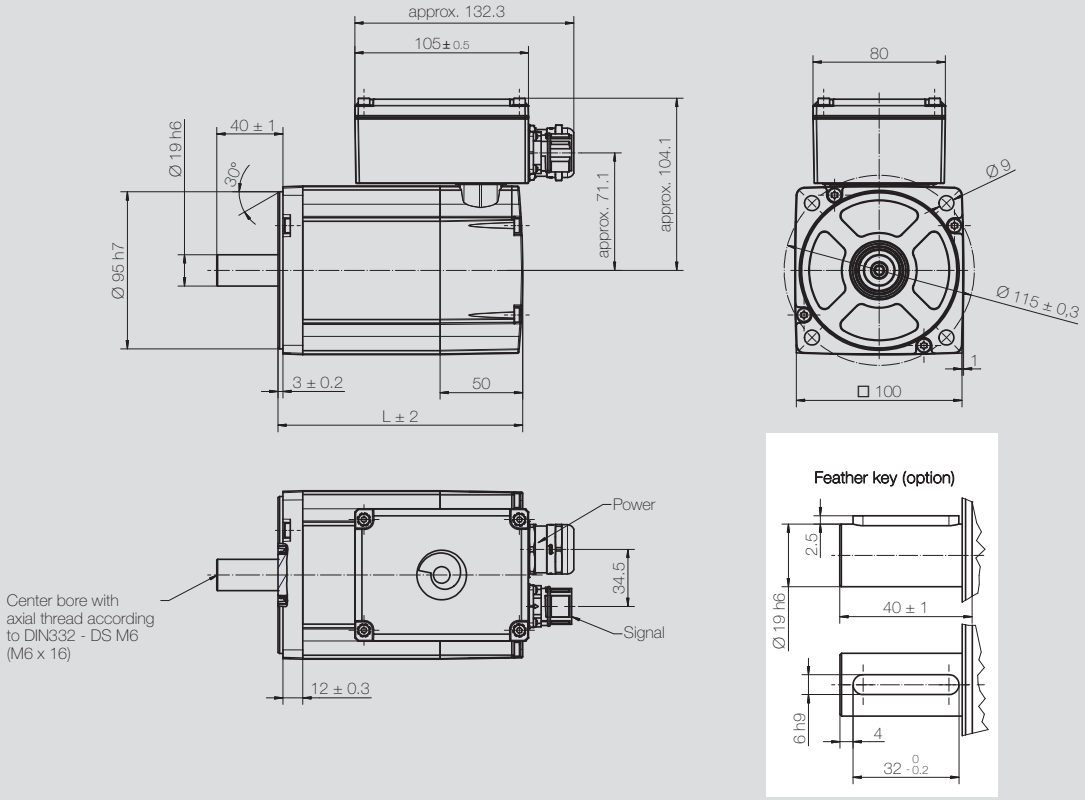

Motor	L [mm] without brake	L [mm] with brake
HMD10-105	205 mm	252 mm

HMD10-105

320 / 560 V

Specifications

		HMD10-105			
Rated speed [rpm]	n_n	3,000	5,000	3,000	5,000
Number of pole pairs		5	5	5	5
Wiring of the motor winding		Y	Y	Y	Y
DC bus voltage [V_{DC}]	U_{bus}	320	320	560	560
Rated voltage motor [V_{rms}]	U_{mot}	186	184	321	299
Rated power [W]	P_n	2,700	2,900	2,700	2,900
Rated torque [Nm]	M_n	8.6	5.5	8.6	5.5
Rated current per phase [A_{rms}]	I_n	9.5	10.6	5.5	6.5
Stall torque [Nm]	**M_0**	**10.5**	**10.5**	**10.5**	**10.5**
Stall current per phase [A_{rms}]	I_0	11.0	18.0	6.4	11.0
Peak torque [Nm]	M_{max}	26.3	26.3	26.3	26.3
Peak current [A_{rms}]	I_{max}	27.5	45.0	16.0	27.5
Maximum speed [rpm]	n_{max}	3,480	5,660	3,520	6,090
Voltage constant at 1,000 rpm [V_{rms}]	k_e	60.5	37.2	104.8	60.5
Torque constant [Nm / A_{rms}]	k_t	0.91	0.52	1.56	0.85
Winding resistance (2 phases) at 20 °C [Ω]	R_{p-p}	0.77	0.29	2.3	0.77
Winding inductance (2 phases) [mH]	L_{p-p}	3.2	1.2	9.4	3.2
Electrical time constant [ms]	t_{el}	4.2	4.1	4.1	4.2
Thermal time constant [min]	t_{th}	35	35	35	35
Moment of inertia rotor [kg-cm²]	J	5.21E+00	5.21E+00	5.21E+00	5.21E+00
Weight of motor [kg]	m	6.5	6.5	6.5	6.5

All nominal values with resolver.

Performance

HMD10-105-320-30-*

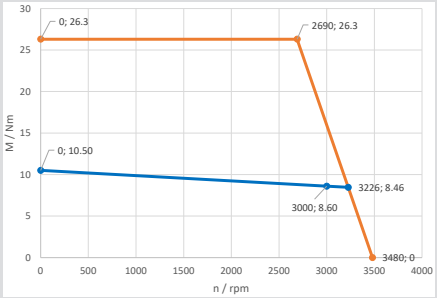

HMD10-105-320-50-*

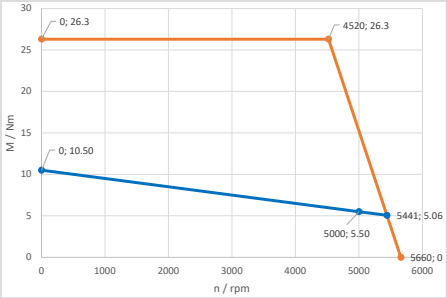

M max
M (S1)

Dimensions

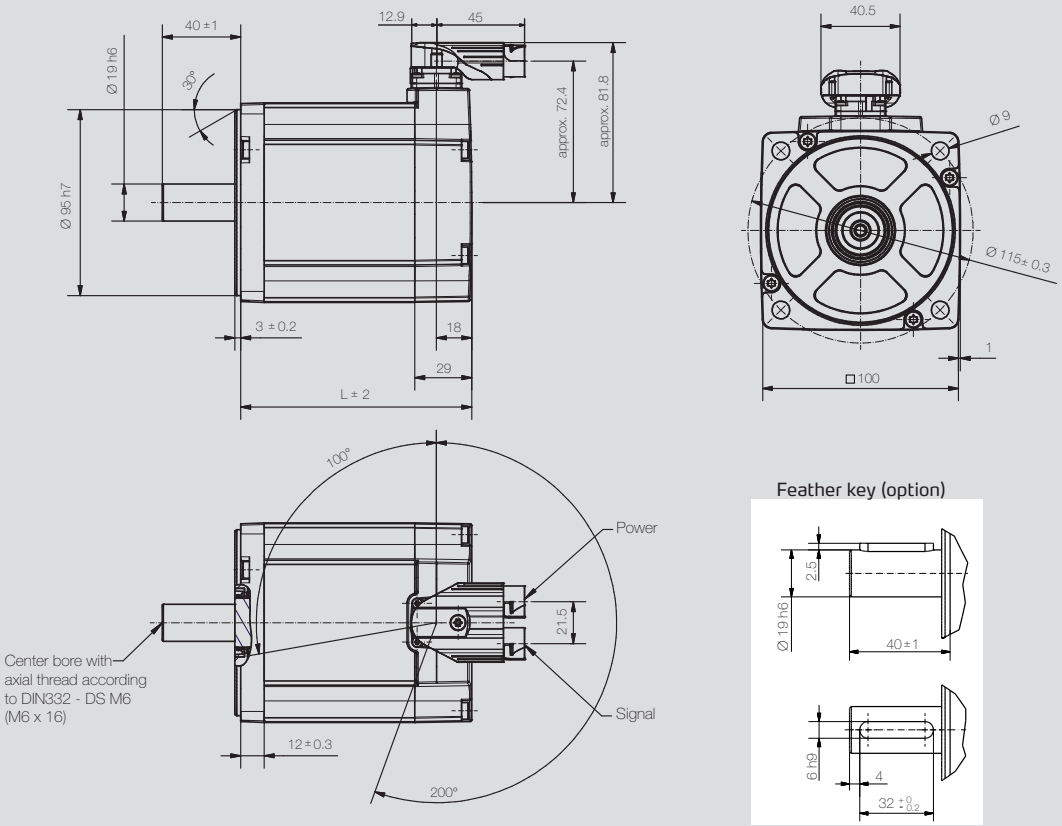

Motor	L [mm] *with encoder category 1** without brake	L [mm] *with encoder category 1** with brake	L [mm] *with encoder category 2** without brake	L [mm] *with encoder category 2** with brake
HMD10-105	184 mm	231 mm	205 mm	252 mm

** Encoder category 1: Resolver, ECI1118, SEK/SEL37, HESx/HEMx, AM 34; only for variants with U_{bus} = 320/560 VDC*
Encoder category 2: Remaining encoders

HMD10-105-560-30-*

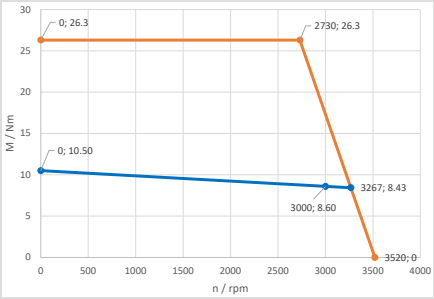

HMD10-105-560-50-*

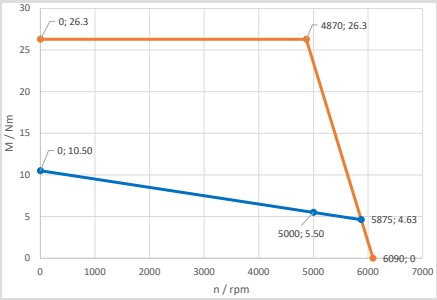

HMD13-133

Specifications

		HMD13-133	
Rated speed [rpm]	n_n	2,000	3,600
Number of pole pairs		5	5
Wiring of the motor winding		Y	Y
DC bus voltage [V_{DC}]	U_{bus}	560	560
Rated voltage motor [V_{rms}]	U_{mot}	326	331
Rated power [W]	P_n	2,400	3,400
Rated torque [Nm]	M_n	11.5	9.0
Rated current per phase [A_{rms}]	I_n	4.8	6.3
Stall torque [Nm]	M_0	13.3	13.3
Stall current per phase [A_{rms}]	I_0	5.5	9.3
Peak torque [Nm]	M_{max}	33.3	33.3
Peak current [A_{rms}]	I_{max}	13.8	23.1
Maximum speed [rpm]	n_{max}	2,340	4,040
Voltage constant at 1,000 rpm [V_{rms}]	k_e	157.7	91.2
Torque constant [Nm / A_{rms}]	k_t	2.42	1.43
Winding resistance (2 phases) at 20 °C [Ω]	R_{p-p}	2.67	0.812
Winding inductance (2 phases) [mH]	L_{p-p}	25.04	6.96
Electrical time constant [ms]	t_{el}	9.4	8.6
Thermal time constant [min]	t_{th}	42	42
Moment of inertia rotor [kg-cm²]	J	8.21E+00	8.21E+00
Weight of motor [kg]	m	8.4	8.4

All nominal values with resolver.

Performance

HMD13-133-560-20-*

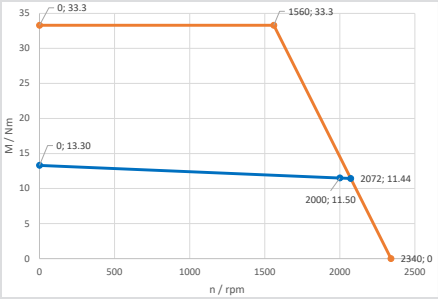

HMD13-133-560-36-*

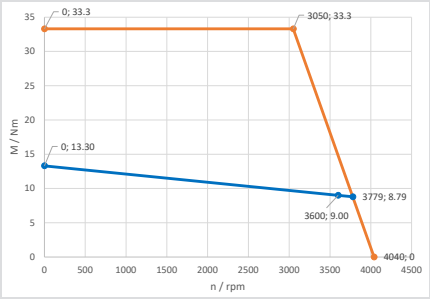

M max
M (S1)

Dimensions

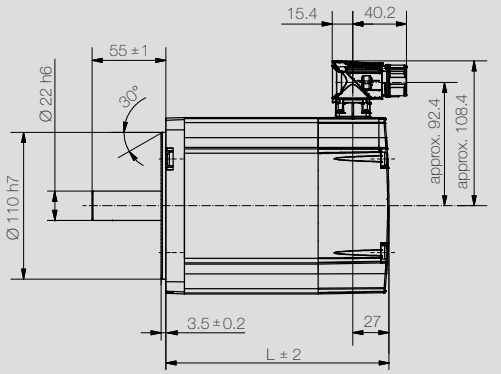

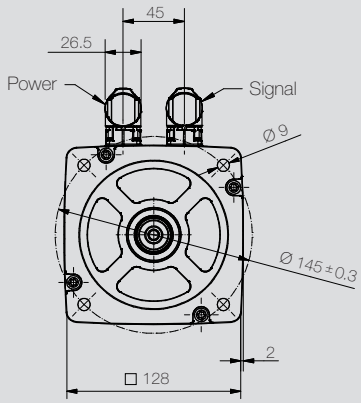

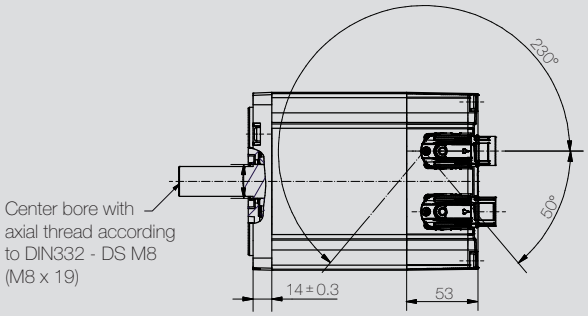

Feather key (option)

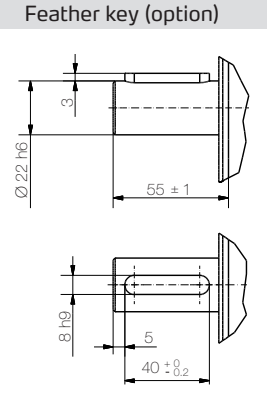

L [mm]	
without brake	with brake
185 mm	223 mm

HMD13

HMD13-190

Specifications

		HMD13-190	
Rated speed [rpm]	n_n	2,000	3,600
Number of pole pairs		5	5
Wiring of the motor winding		Y	Y
DC bus voltage [V_{DC}]	U_{bus}	560	560
Rated voltage motor [V_{rms}]	U_{mot}	330	316
Rated power [W]	P_n	3,350	4,200
Rated torque [Nm]	M_n	16.0	11.2
Rated current per phase [A_{rms}]	I_n	6.3	8.2
Stall torque [Nm]	M_0	19.0	19.0
Stall current per phase [A_{rms}]	I_0	7.5	13.7
Peak torque [Nm]	M_{max}	47.5	47.5
Peak current [A_{rms}]	I_{max}	18.8	34.3
Maximum speed [rpm]	n_{max}	2,280	4,210
Voltage constant at 1,000 rpm [V_{rms}]	k_e	161.9	87.5
Torque constant [Nm / A_{rms}]	k_t	2.54	1.37
Winding resistance (2 phases) at 20 °C [Ω]	R_{p-p}	1.50	0.440
Winding inductance (2 phases) [mH]	L_{p-p}	15.25	4.5
Electrical time constant [ms]	t_{el}	10.3	10.2
Thermal time constant [min]	t_{th}	49	49
Moment of inertia rotor [kg-cm²]	J	1.20E+01	1.20E+01
Weight of motor [kg]	m	11.0	11.0

All nominal values with resolver.

Performance

HMD13-190-560-20-*

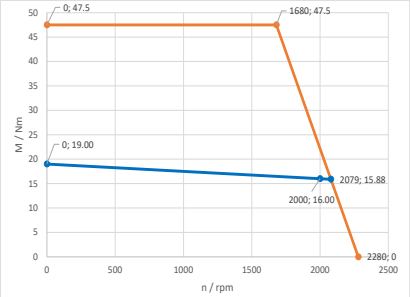

HMD13-190-560-36-*

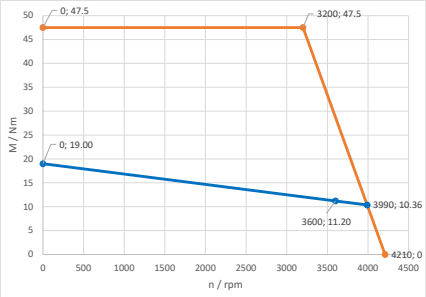

M max
M (S1)

Dimensions

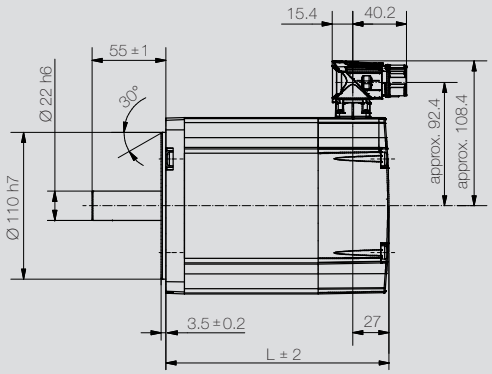

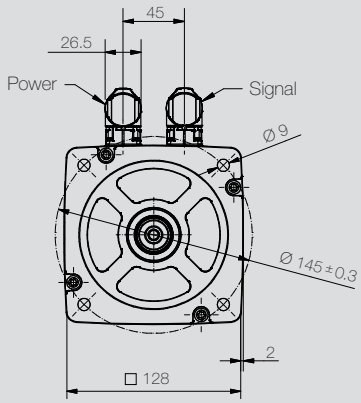

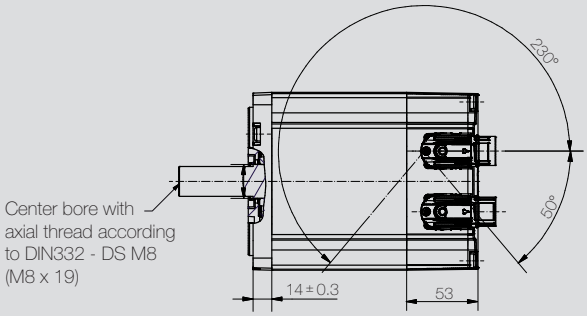

Feather key (option)

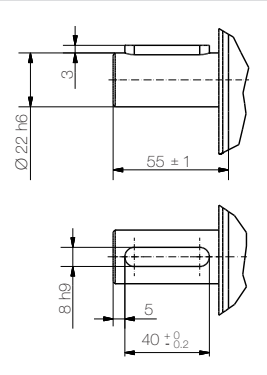

L [mm]	
without brake	with brake
215 mm	253 mm

HMD13

HMD13-245

Specifications

		HMD13-245	
Rated speed [rpm]	n_n	2,000	3,600
Number of pole pairs		5	5
Wiring of the motor winding		Y	Y
DC bus voltage [V_{DC}]	U_{bus}	560	560
Rated voltage motor [V_{rms}]	U_{mot}	327	322
Rated power [W]	P_n	4,300	5,000
Rated torque [Nm]	M_n	20.5	13.3
Rated current per phase [A_{rms}]	I_n	8.2	9.6
Stall torque [Nm]	**M_0**	**24.5**	**24.5**
Stall current per phase [A_{rms}]	I_0	9.7	17.1
Peak torque [Nm]	M_{max}	61.3	61.3
Peak current [A_{rms}]	I_{max}	24.3	42.8
Maximum speed [rpm]	n_{max}	2,320	4,120
Voltage constant at 1,000 rpm [V_{rms}]	k_e	158.7	89.5
Torque constant [Nm / A_{rms}]	k_t	2.50	1.39
Winding resistance (2 phases) at 20 °C [Ω]	R_{p-p}	1.08	0.340
Winding inductance (2 phases) [mH]	L_{p-p}	10.59	3.33
Electrical time constant [ms]	t_{el}	9.8	9.7
Thermal time constant [min]	t_{th}	49	49
Moment of inertia rotor [kg-cm²]	J	1.58E+01	1.58E+01
Weight of motor [kg]	m	13.5	13.5

All nominal values with resolver.

Performance

HMD13-245-560-20-*

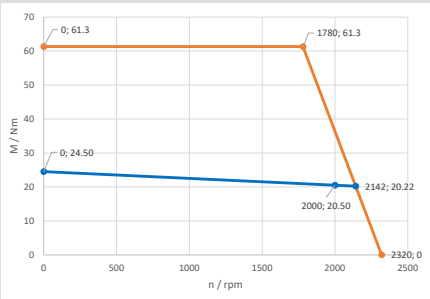

HMD13-245-560-36-*

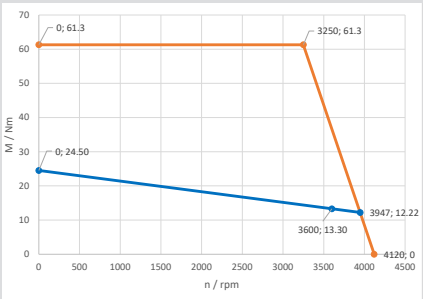

M max
M (S1)

Dimensions

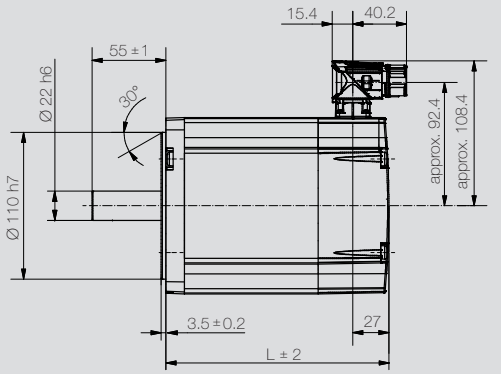

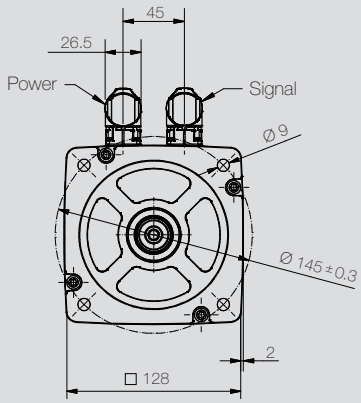

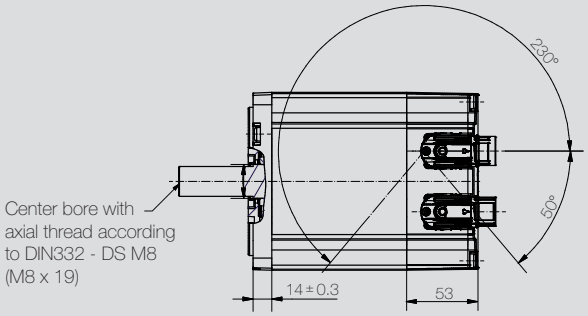

Feather key (option)

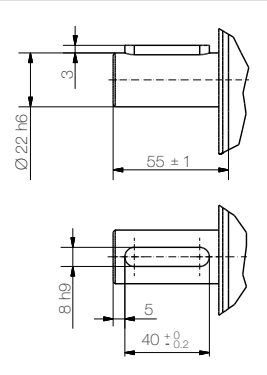

L [mm]	
without brake	with brake
245 mm	306 mm

HMD13

HMD15-036

Specifications

		HMD15-036	
Rated speed [rpm]	n_n	2,000	3,000
Number of pole pairs		5	5
Wiring of the motor winding		Y	Y
DC bus voltage [V_{DC}]	U_{bus}	560	560
Rated voltage motor [V_{rms}]	U_{mot}	314	307
Rated power [W]	P_n	5,850	6,600
Rated torque [Nm]	M_n	28.0	21.0
Rated current per phase [A_{rms}]	I_n	11.7	13.2
Stall torque [Nm]	**M_0**	**36.0**	**36.0**
Stall current per phase [A_{rms}]	I_0	15.1	22.6
Peak torque [Nm]	M_{max}	72.0	72.0
Peak current [A_{rms}]	I_{max}	30.2	45.2
Maximum speed [rpm]	n_{max}	2,430	3,640
Voltage constant at 1,000 rpm [V_{rms}]	k_e	152.0	101.4
Torque constant [Nm / A_{rms}]	k_t	2.39	1.59
Winding resistance (2 phases) at 20 °C [Ω]	R_{p-p}	0.560	0.250
Winding inductance (2 phases) [mH]	L_{p-p}	8.9	3.94
Electrical time constant [ms]	t_{el}	15.9	15.8
Thermal time constant [min]	t_{th}	45	45
Moment of inertia rotor [kg-cm²]	J	3.87E+01	3.87E+01
Weight of motor [kg]	m	19.0	19.0

All nominal values with resolver.

Performance

HMD15-036-560-20-*

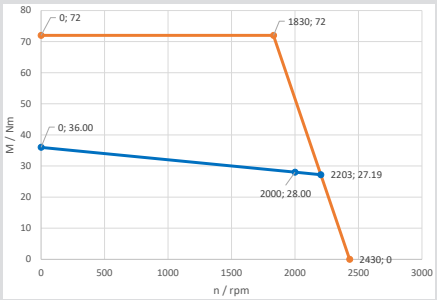

HMD15-036-560-30-*

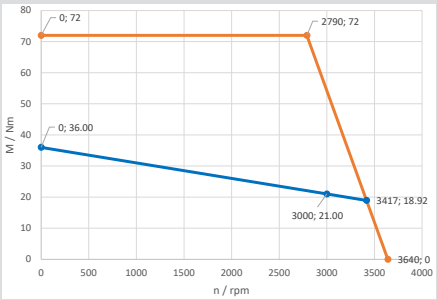

M max
M (S1)

Dimensions

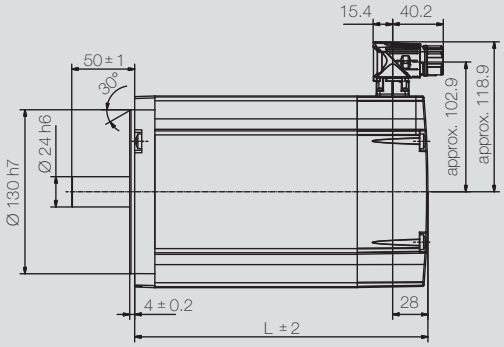

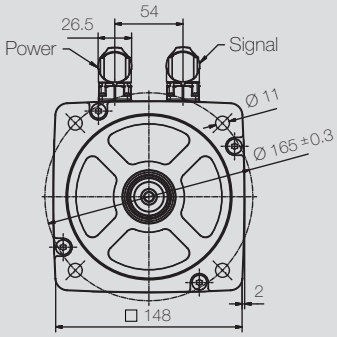

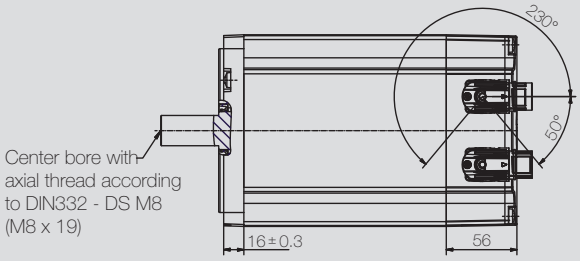

Feather key (option)

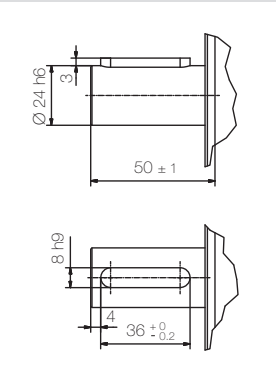

Motor	L [mm] without brake	L [mm] with brake
HMD15-036	260 mm	311 mm

HMD15

HMD15-043

Specifications

		HMD15-043	
Rated speed [rpm]	n_n	2,000	3,000
Number of pole pairs		5	5
Wiring of the motor winding		Y	Y
DC bus voltage [V_{DC}]	U_{bus}	560	560
Rated voltage motor [V_{rms}]	U_{mot}	307	313
Rated power [W]	P_n	6,800	7,850
Rated torque [Nm]	M_n	32.5	25.0
Rated current per phase [A_{rms}]	I_n	13.8	15.3
Stall torque [Nm]	M_0	42.5	42.5
Stall current per phase [A_{rms}]	I_0	18.0	26.0
Peak torque [Nm]	M_{max}	85.0	85.0
Peak current [A_{rms}]	I_{max}	36.0	52.0
Maximum speed [rpm]	n_{max}	2,460	3,560
Voltage constant at 1,000 rpm [V_{rms}]	k_e	149.8	103.7
Torque constant [Nm / A_{rms}]	k_t	2.36	1.63
Winding resistance (2 phases) at 20 °C [Ω]	R_{p-p}	0.41	0.2
Winding inductance (2 phases) [mH]	L_{p-p}	6.8	3.3
Electrical time constant [ms]	t_{el}	16.6	16.5
Thermal time constant [min]	t_{th}	50	50
Moment of inertia rotor [kg-cm²]	J	4.82E+01	4.82E+01
Weight of motor [kg]	m	23.0	23.0

All nominal values with resolver.

Performance

HMD15-043-560-20-*

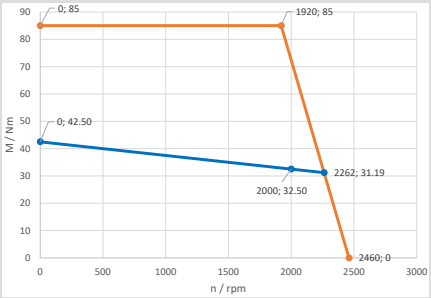

HMD15-043-560-30-*

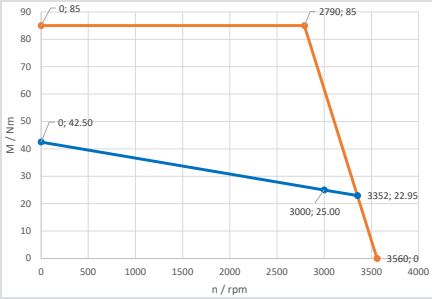

M max
M (S1)

Dimensions

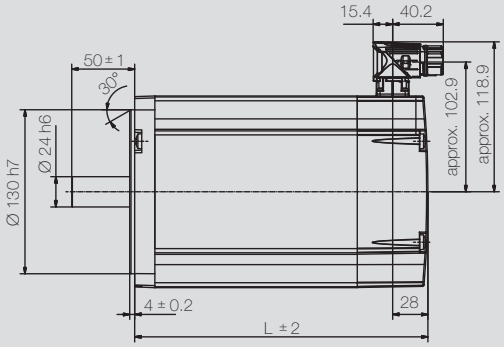

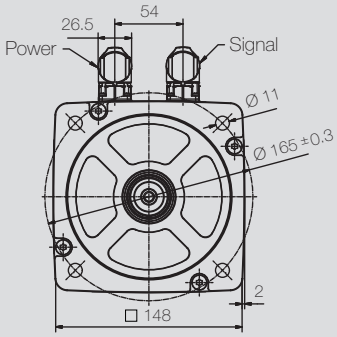

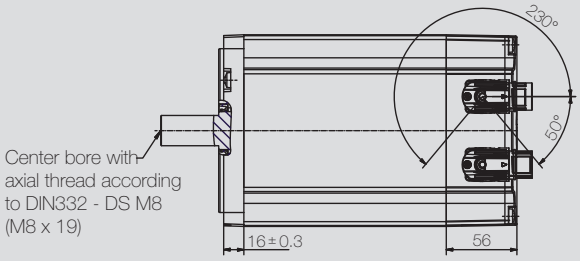

Feather key (option)

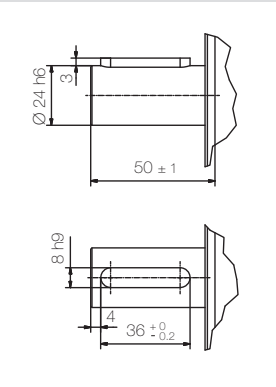

Motor	L [mm] without brake	L [mm] with brake
HMD15-043	290 mm	341 mm

HMD15

HMD15-049

Specifications

		HMD15-049	
Rated speed [rpm]	n_n	2,000	3,000
Number of pole pairs		5	5
Wiring of the motor winding		Y	Y
DC bus voltage [V_{DC}]	U_{bus}	560	560
Rated voltage motor [V_{rms}]	U_{mot}	311	313
Rated power [W]	P_n	7,750	9,110
Rated torque [Nm]	M_n	37.0	29.0
Rated current per phase [A_{rms}]	I_n	15.5	17.8
Stall torque [Nm]	M_0	49.0	49.0
Stall current per phase [A_{rms}]	I_0	20.4	30.0
Peak torque [Nm]	M_{max}	98.0	98.0
Peak current [A_{rms}]	I_{max}	40.8	60.0
Maximum speed [rpm]	n_{max}	2,430	3,560
Voltage constant at 1,000 rpm [V_{rms}]	k_e	152.0	103.7
Torque constant [Nm / A_{rms}]	k_t	2.39	1.63
Winding resistance (2 phases) at 20 °C [Ω]	R_{p-p}	0.348	0.160
Winding inductance (2 phases) [mH]	L_{p-p}	5.93	2.75
Electrical time constant [ms]	t_{el}	17.0	17.2
Thermal time constant [min]	t_{th}	55	55
Moment of inertia rotor [kg-cm²]	J	5.76E+01	5.76E+01
Weight of motor [kg]	m	26.0	26.0

All nominal values with resolver.

Performance

HMD15-049-560-20-*

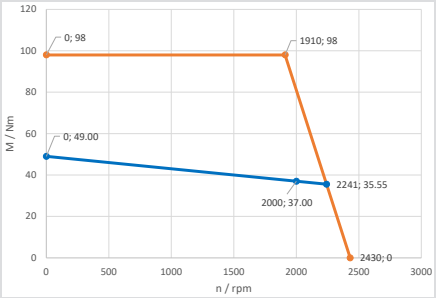

HMD15-049-560-30-*

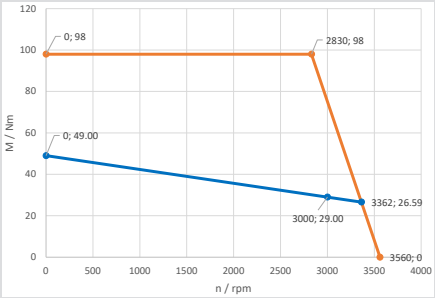

M max
M (S1)

Dimensions

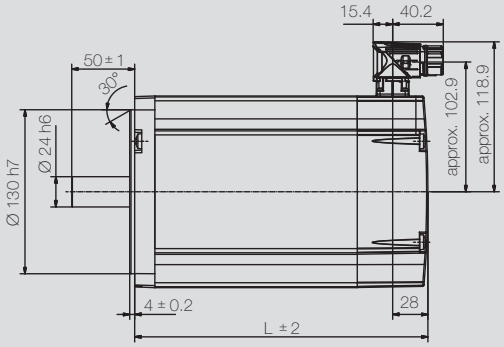

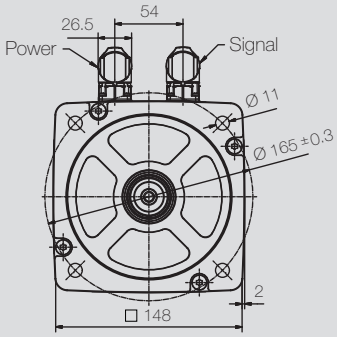

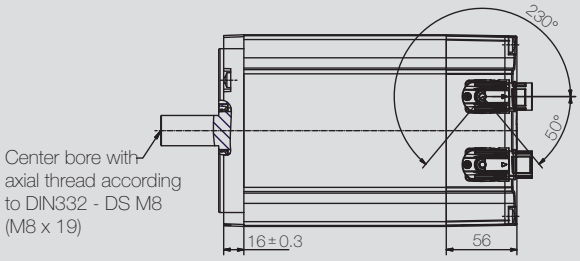

Feather key (option)

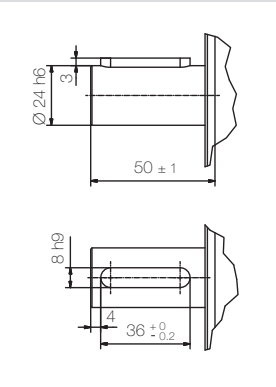

Motor	L [mm] without brake	L [mm] with brake
HMD15-049	320 mm	384 mm

HMD15

HMD19-051

Specifications

		HMD19-051	
Rated speed [rpm]	n_n	2,000	3,000
Number of pole pairs		5	5
Wiring of the motor winding		Y	Y
DC bus voltage [V_{DC}]	U_{bus}	560	560
Rated voltage motor [V_{rms}]	U_{mot}	284	283
Rated power [W]	P_n	7,435	8,000
Rated torque [Nm]	M_n	35.5	25.5
Rated current per phase [A_{rms}]	I_n	16.6	17.6
Stall torque [Nm]	M_0	51.0	51.0
Stall current per phase [A_{rms}]	I_0	24.5	35.9
Peak torque [Nm]	M_{max}	102.0	102.0
Peak current [A_{rms}]	I_{max}	49.0	71.8
Maximum speed [rpm]	n_{max}	2,600	3,980
Voltage constant at 1,000 rpm [V_{rms}]	k_e	141.8	92.7
Torque constant [Nm / A_{rms}]	k_t	2.14	1.45
Winding resistance (2 phases) at 20 °C [Ω]	R_{p-p}	0.175	0.081
Winding inductance (2 phases) [mH]	L_{p-p}	6.88	3.28
Electrical time constant [ms]	t_{el}	78.2	40.5
Thermal time constant [min]	t_{th}	60	60
Moment of inertia rotor [kg-cm²]	J	7.42E+01	7.42E+01
Weight of motor [kg]	m	35.0	35.0

All nominal values with resolver.

Performance

HMD19-051-560-20-*

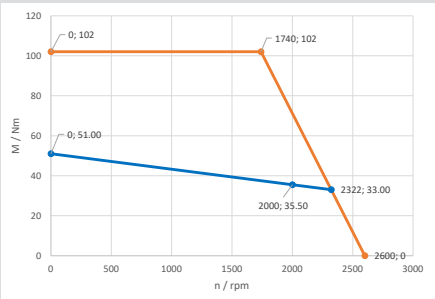

HMD19-051-560-30-*

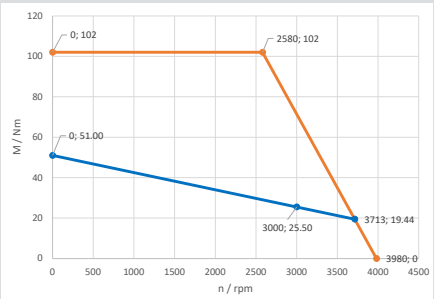

M max
M (S1)

Dimensions

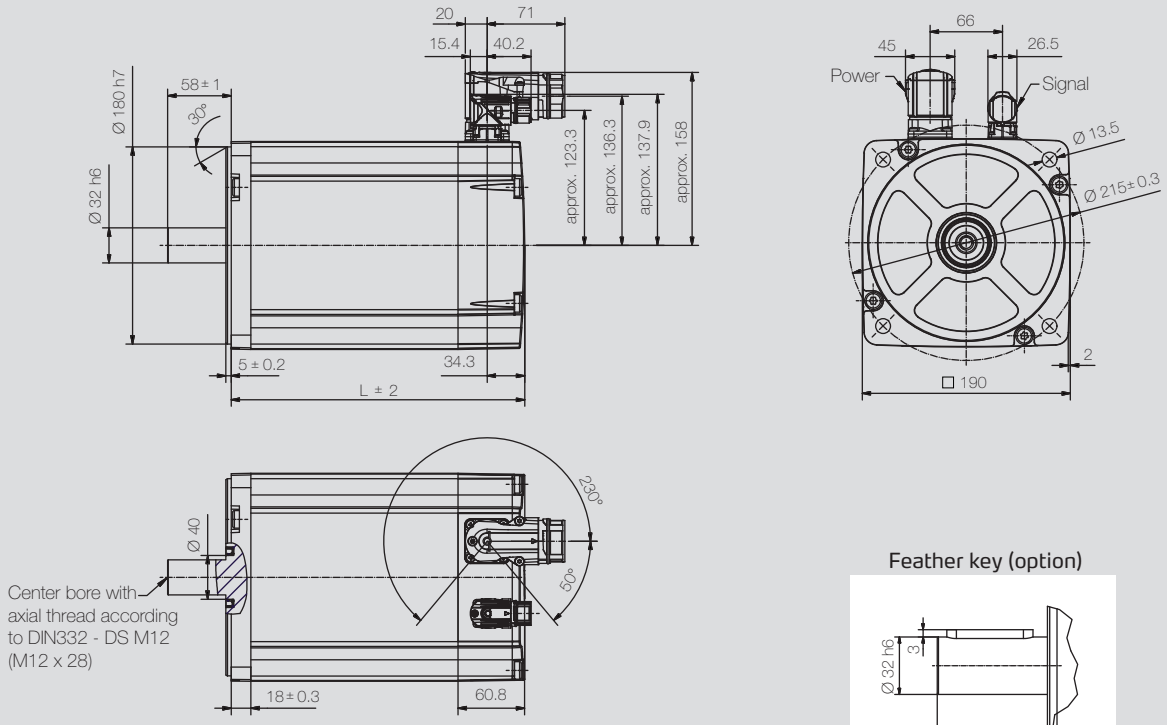

Feather key (option)

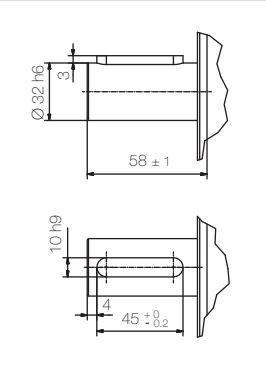

Motor	L [mm] without brake	L [mm] with brake
HMD19-051	283 mm	336 mm

HMD19

HMD19-078

Specifications

		HMD19-078	
Rated speed [rpm]	n_n	2,000	3,000
Number of pole pairs		5	5
Wiring of the motor winding		Y	Y
DC bus voltage [V_{DC}]	U_{bus}	560	560
Rated voltage motor [V_{rms}]	U_{mot}	280	273
Rated power [W]	P_n	10,780	10,680
Rated torque [Nm]	M_n	51.5	34.0
Rated current per phase [A_{rms}]	I_n	24.4	24.1
Stall torque [Nm]	**M_0**	**78.0**	**78.0**
Stall current per phase [A_{rms}]	I_0	38.0	56.6
Peak torque [Nm]	M_{max}	156.0	156.0
Peak current [A_{rms}]	I_{max}	76.0	113.2
Maximum speed [rpm]	n_{max}	2,630	4,030
Voltage constant at 1,000 rpm [V_{rms}]	k_e	140.1	91.4
Torque constant [Nm / A_{rms}]	k_t	2.11	1.41
Winding resistance (2 phases) at 20 °C [Ω]	R_{p-p}	0.104	0.046
Winding inductance (2 phases) [mH]	L_{p-p}	4.50	2.08
Electrical time constant [ms]	t_{el}	42.5	45.2
Thermal time constant [min]	t_{th}	70	70
Moment of inertia rotor [kg-cm²]	J	1.10E+02	1.10E+02
Weight of motor [kg]	m	44.0	44.0

All nominal values with resolver.

Performance

HMD19-078-560-20-*

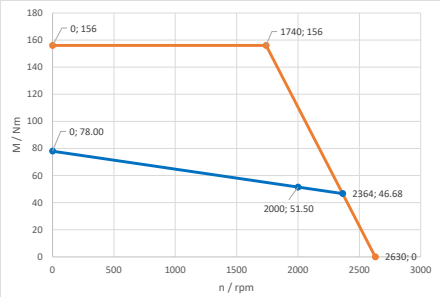

HMD19-078-560-30-*

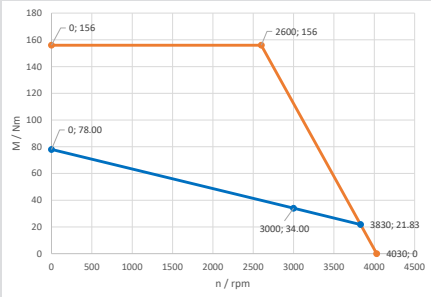

M max
M (S1)

Dimensions

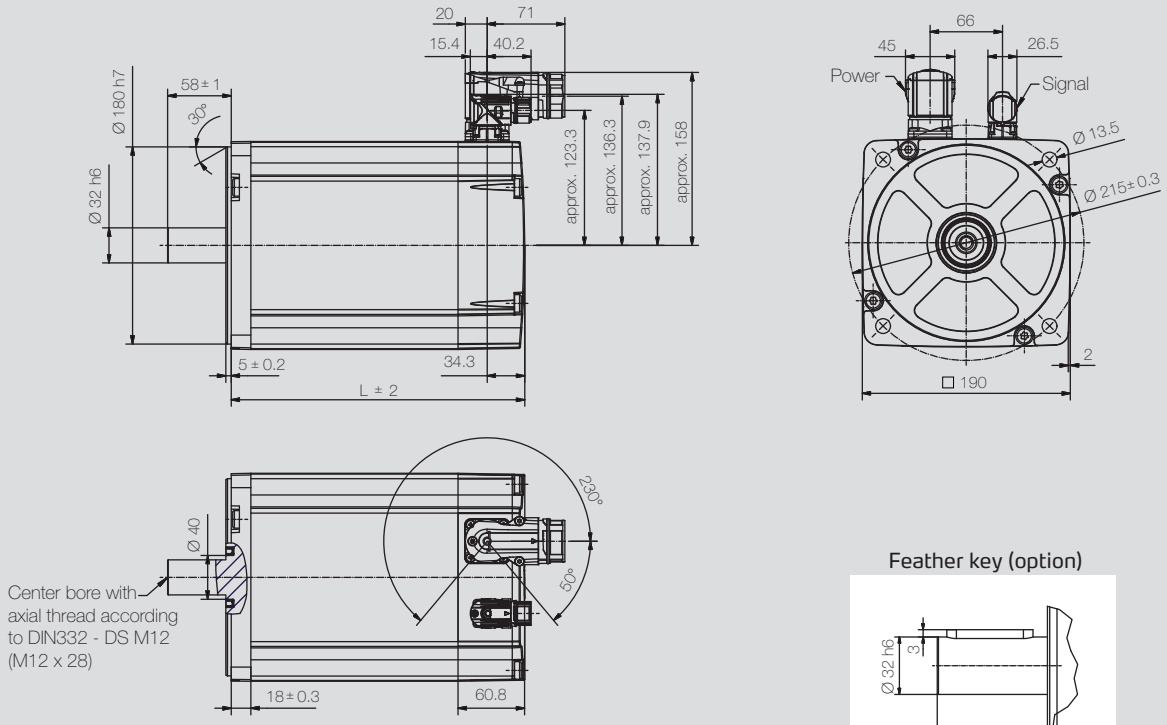

Feather key (option)

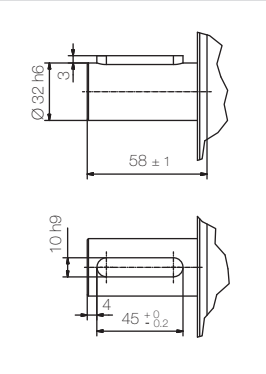

Motor	L [mm] without brake	L [mm] with brake
HMD19-078	343 mm	406 mm

HMD19

HMD19-105

Specifications

		HMD19-105
Rated speed [rpm]	n_n	2,000
Number of pole pairs		5
Wiring of the motor winding		Y
DC bus voltage [V_{DC}]	U_{bus}	560
Rated voltage motor [V_{rms}]	U_{mot}	271
Rated power [W]	P_n	13,920
Rated torque [Nm]	M_n	66.5
Rated current per phase [A_{rms}]	I_n	32.5
Stall torque [Nm]	M_0	105.0
Stall current per phase [A_{rms}]	I_0	52.5
Peak torque [Nm]	M_{max}	210.0
Peak current [A_{rms}]	I_{max}	105.0
Maximum speed [rpm]	n_{max}	2,720
Voltage constant at 1,000 rpm [V_{rms}]	k_e	135.5
Torque constant [Nm / A_{rms}]	k_t	2.05
Winding resistance (2 phases) at 20 °C [Ω]	R_{p-p}	0.071
Winding inductance (2 phases) [mH]	L_{p-p}	3.20
Electrical time constant [ms]	t_{el}	44.8
Thermal time constant [min]	t_{th}	80
Moment of inertia rotor [kg-cm²]	J	1.45E+02
Weight of motor [kg]	m	53.0

All nominal values with resolver.

Performance

HMD19-105-560-20-*

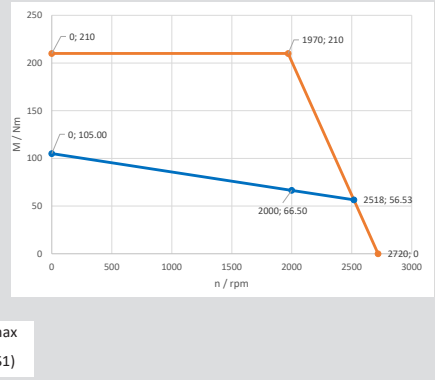

Dimensions

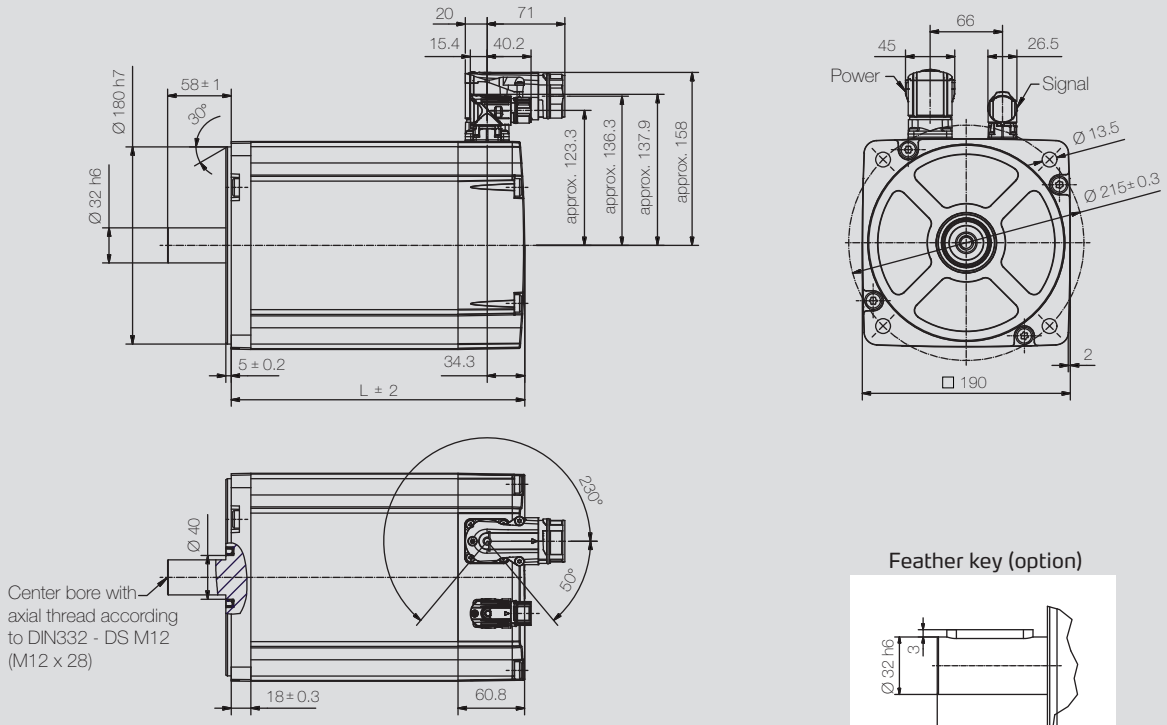

Feather key (option)

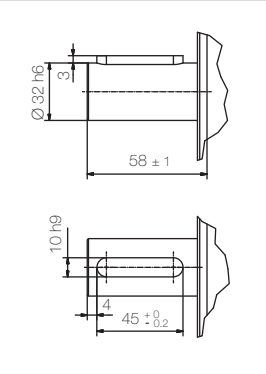

Motor	L [mm] without brake	L [mm] with brake
HMD19-105	403 mm	466 mm

HMD19

Configuration Options

Feedback Options

(Interfaces see page 80 - 89)

As standard, HeiMotion Dynamic motors are supplied with a resolver. As an option, various encoders with different interfaces can be mounted to the series.

Motor model	Resolver*	HES1 (1.0 V pp)	HEM1 (1.0 V pp without battery)	HEM1 (1.0 V pp with battery)	AM 34	HES 3	ECI1118	EQI 1131	ECI1319
HMD06-XXX-024-*	x	x	x	x	x	x	x		
HMD06-XXX-048-*	x	x	x	x	x	x	x		
HMD06-XXX-320-*	x	x	x	x	x	x	x	x	
HMD06-XXX-560-*	x	x	x	x	x	x	x	x	
HMD08-XXX-024-*	x	x	x	x	x	x	x		
HMD08-XXX-048-*	x	x	x	x	x	x	x		
HMD08-XXX-320-*	x	x	x	x	x	x	x	x	
HMD08-XXX-560-*	x	x	x	x	x	x	x	x	
HMD10-XXX-048-*	x	x	x	x	x	x	x		
HMD10-XXX-320-*	x	x	x	x	x	x	x	x	
HMD10-XXX-560-*	x	x	x	x	x	x	x	x	
HMD13-XXX-560-*	x	x	x	x	x	x	x	x	
HMD15-XXX-560-*	x	x	x	x	x	x			x
HMD19-XXX-560-*	x	x	x	x	x	x			x

Motor model	ECI 1319	EQI 1331	SEK 37	SEL 37	SKS 36*	SKM 36*	SRS 50	SRM 50
HMD06-XXX-024-*			x	x	x**	x**		
HMD06-XXX-048-*			x	x	x**	x**		
HMD06-XXX-320-*			x	x	x	x		
HMD06-XXX-560-*			x	x	x	x		
HMD08-XXX-024-*			x	x				
HMD08-XXX-048-*			x	x				
HMD08-XXX-320-*			x	x	x	x	x	x
HMD08-XXX-560-*			x	x	x	x	x	x
HMD10-XXX-048-*			x	x				
HMD10-XXX-320-*			x	x	x	x	x	x
HMD10-XXX-560-*			x	x	x	x	x	x
HMD13-XXX-560-*			x	x	x	x	x	x
HMD15-XXX-560-*	x	x	x	x	x	x	x	x
HMD19-XXX-560-*	x	x	x	x	x	x	x	x

Motor model	EES 37*	EEM 37*	EKS 36*	EKM 36*	EDS 35	EDM 35
HMD06-XXX-024-*						
HMD06-XXX-048-*						
HMD06-XXX-320-*	x	x	x	x	x	x
HMD06-XXX-560-*	x	x	x	x	x	x
HMD08-XXX-024-*						
HMD08-XXX-048-*						
HMD08-XXX-320-*	x	x	x	x	x	x
HMD08-XXX-560-*	x	x	x	x	x	x
HMD10-XXX-048-*						
HMD10-XXX-320-*	x	x	x	x	x	x
HMD10-XXX-560-*	x	x	x	x	x	x
HMD13-XXX-560-*	x	x	x	x	x	x
HMD15-XXX-560-*	x	x	x	x	x	x
HMD19-XXX-560-*	x	x	x	x	x	x

* Also available safely mounted, alternative encoder systems upon request.
** Upon request.

Feedback System Overview

Feedback device type	HCB	HCL
Resolver	X	
HIPERFACE® encoder	X	
HIPERFACE DSL®-encoder	X	
Incremental encoder	X	X
SSI/BiSS-C	X	X*
EnDAT® encoder	X	
	p. 104	p. 110

* HCL 225 C/E incremental only; see overview on page 118.

Connection Options

The different variants of the connection options can be found on the following pages (p. 78 und p. 79).

Effective Current Calculation for Connector Design

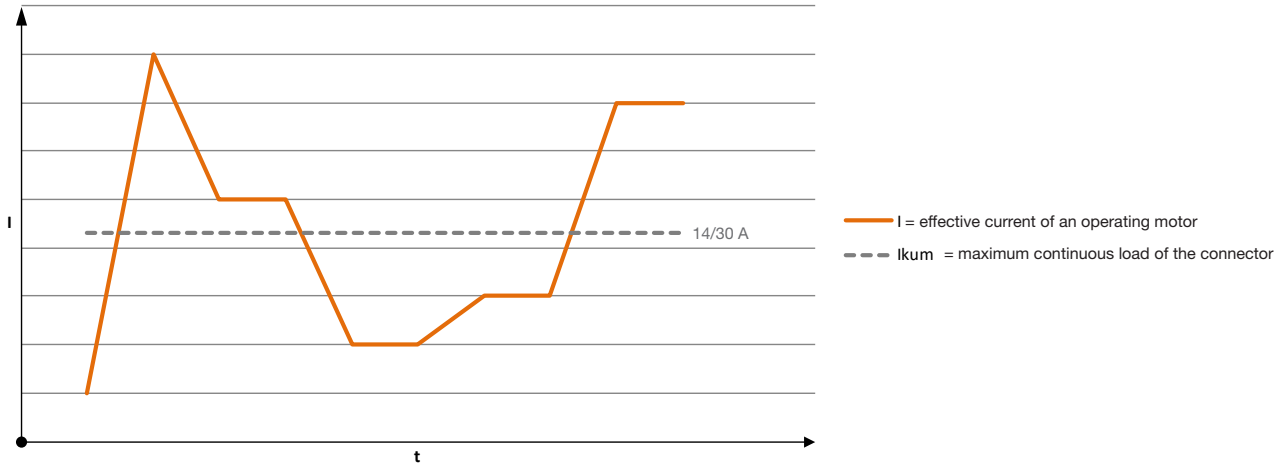

Connection Technology

Motor model	M23	M40+M23	Y-Tec	I-Tec	cable outlet 1, 5 m	cable outlet 5 m	terminal box	short version[2]	long version[3]	M23 H-Tec	M40 H-Tec
HMD06-011-024-30	•		•						•		
HMD06-011-048-30	•		•						•		
HMD06-011-048-60	•		•						•		
HMD06-011-320-30	•		•	•	o	o		•			
HMD06-011-320-60	•		•	•	o	o		•			
HMD06-011-560-30	•		•	•	o	o		•			
HMD06-011-560-60	•		•	•	o	o		•			
HMD06-019-048-30	•		•						•		
HMD06-019-320-30	•		•	•	o	o		•			
HMD06-019-320-60	•		•	•	o	o		•			
HMD06-019-560-30	•		•	•	o	o		•			
HMD06-019-560-60	•		•	•	o	o		•			
HMD06-026-048-30	•		•						•		
HMD06-026-048-60	•[1]								•		
HMD06-026-320-30	•		•	•	o	o		•			
HMD06-026-320-60	•		•	•	o	o		•			
HMD06-026-560-30	•		•	•	o	o		•			
HMD06-026-560-60	•		•	•	o	o		•			
HMD08-024-024-30	o[1]						•		•		
HMD08-024-048-30	•						•		•		
HMD08-024-048-55	o[1]						•		•		
HMD08-024-320-30	•		•	•	o	o		•			
HMD08-024-320-55	•		•	•	o	o		•			
HMD08-024-560-30	•		•	•	o	o		•			
HMD08-024-560-55	•		•	•	o	o		•			
HMD08-032-024-30	o[1]						•		•		
HMD08-032-048-30	•						•		•		
HMD08-032-048-55	o[1]						•		•		
HMD08-032-320-30	•		•	•	o	o		•			
HMD08-032-320-55	•		•	•	o	o		•			
HMD08-032-560-30	•		•	•	o	o		•			
HMD08-032-560-55	•		•	•	o	o		•			
HMD08-042-024-30							•		•		
HMD08-042-048-30	o[1]						•		•		
HMD08-042-048-55							•		•		
HMD08-042-320-30	•		•	•	o	o		•			
HMD08-042-320-55	•		•	•	o	o		•			
HMD08-042-560-30	•		•	•	o	o		•			
HMD08-042-560-55	•		•	•	o	o		•			
HMD08-057-048-30							•		•		
HMD08-057-320-30	•		•	•	o	o		•			
HMD08-057-320-55	•		•	•	o	o		•			
HMD08-057-560-30	•		•	•	o	o		•			
HMD08-057-560-55	•		•	•	o	o		•			
Rated current (A_{rms})	30.0	72.0	14.0	14.0	upon request	upon request	upon request				

Motor model	M23	M40+M23	Y-Tec	I-Tec	cable outlet 1, 5 m	cable outlet 5 m	terminal box	short version[2]	long version[3]	M23 H-Tec	M40 H-Tec
HMD10-039-048-30	○[1]						•		•		
HMD10-039-048-50							•		•		
HMD10-039-320-30	•		•	•	○	○		•			
HMD10-039-320-50	•		•	•	○	○		•			
HMD10-039-560-30	•		•	•	○	○		•			
HMD10-039-560-50	•		•	•	○	○		•			
HMD10-057-048-30							•		•		
HMD10-057-048-50							•		•		
HMD10-057-320-30	•		•	•	○	○		•			
HMD10-057-320-50	•		•	•	○	○		•			
HMD10-057-560-30	•		•	•	○	○		•			
HMD10-057-560-50	•		•	•	○	○		•			
HMD10-076-048-30							•		•		
HMD10-076-320-30	•		•	•	○	○		•			
HMD10-076-320-50	•		•	•	○	○		•			
HMD10-076-560-30	•		•	•	○	○		•			
HMD10-076-560-50	•		•	•	○	○		•			
HMD10-105-048-30							•		•		
HMD10-105-320-30	•		•	•	○	○		•			
HMD10-105-320-50	•				○	○		•			
HMD10-105-560-30	•		•	•	○	○		•			
HMD10-105-560-50	•		•	•	○	○		•			
HMD13-133-560-20	•		•	•	○	○					
HMD13-133-560-36	•		•	•	○	○					
HMD13-190-560-20	•		•	•	○	○					
HMD13-190-560-36	•		•	•	○	○					
HMD13-245-560-20	•		•	•	○	○					
HMD13-245-560-36	•		•	•	○	○					
HMD15-036-560-20	•									•	
HMD15-036-560-30	•									•	
HMD15-043-560-20	•									•	
HMD15-043-560-30	•									•	
HMD15-049-560-20	•									•	
HMD15-049-560-30	•									•	
HMD19-051-560-20	•									•	
HMD19-051-560-30		•									•
HMD19-078-560-20		•									•
HMD19-078-560-30		•									•
HMD19-105-560-20		•									•
Rated current (A_{rms})	30.0	72.0	14.0	14.0	upon request	upon request	upon request			30	70

• Available as standard
○ Only upon request
Other combinations may be possible on request
[1] Rated and/or standstill current of the motor greater than the rated current of the connection technology. When using this connection method, derating of the motor must be accepted.
[2] Available for encoder category 1: Resolver, ECI1118, SEK/SEL37, HESx/HEMx, AM 34
[3] Available for encoder category 2: Remaining encoders

Standard Resolver
Order Code: R1P

Specifications	RE-15
Number of pole pairs	1
Input frequency	10 kHz
Input voltage	7 V_{rms}
Current input	max. 50 mA
Transformation ratio	0.5 ± 10 %
Phase shift (nominal)	5° ± 3°
Ohmic resistance (at 25 °C)	
Stator winding	(at 20 °C) 67 ± 10 %
Rotor winding	(at 20°C) 29 ± 10 %
Impedances	
Zro (no-load impedance rotor)	typ. 95 j 140
Zso (no-load impedance stator)	typ. 130 j 250
Zss (short-circuit impedance stator)	typ. 115 j 215
Maximum residual voltage	30 mV
Accuracy	± 10'
Weight	86 g
Protection class	IP20
Insulation class	F
Insulation test housing / winding	500 V_{AC} / 50 Hz / 1 s
Moment of inertia rotor	15 g-cm²
Order code	XXR1PXXXX

Environmental

Working environment	IE 32 according to EN 60721-3-3
Operating temperature	- 55 °C to 155 °C
Vibration according to EN 60068-2-6	100 m/s² 10 - 150 Hz
Impact strength	400 m/s² 6 ms
Maximum operating speed	20,000 rpm

Dimensions

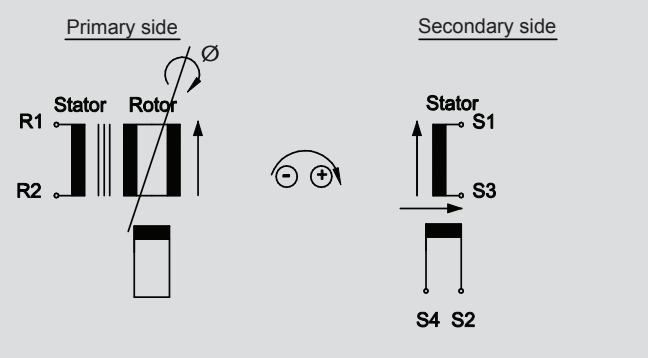

All specified rated motor values determined with resolver.

Safety Norms

Safety Integrity Level	SIL 2 (EN 61800-5-2 / EN 62061)
Category	3 (EN ISO 13849-1)
Performance Level	PL d (EN ISO 13849-1)

SIL/PL Capability
TÜVRheinland CERTIFIED
www.tuv.com
ID 0600000000

Absolute Encoder AM34
Order Code S1S / B1M

Features:

- Integrated, compact dual encoder in the standard HeiMotion modular system
- Singleturn with SSI and sin/cos | Multiturn with BiSS-C [3] and sin/cos
- Speeds up to 12,000 min^{-1}
- Temperature evaluation via BiSS-C possible
- Electronic nameplate possible on request

Specifications	AM34 (singleturn)	AM34 (multiturn)
Supply voltage	5.0 V_{DC} +10/-5%	5.0 V_{DC} +10/-5%
Power consumption	0.6 W	0.6 W
Max. resolution singleturn	16 bit [1]	16 bit [1]
Max. number of absolute revolutions detected	-	12 bit (mechanical)
Data interface	SSI gray (RS422) + SinCos 1V_{pp}	BiSS-C (RS422) [2] + SinCos 1V_{pp}
Sin/cos tracks	differential	differential
Number of sin/cos periods per revolution	256	256
Max. angular acceleration	250,000 rad/sec^2	250,000 rad/sec^2
Resistance to shocks (DIN EN 60068-2-27)	3,000 m/s^2 (6 ms)	3,000 m/s^2 (6 ms)
Resistance to vibration (DIN EN 60068-2-6)	300 m/s^2 (10...2000 Hz) 100 m/s^2 (10...2000 Hz) min.	300 m/s^2 (10...2000 Hz) 100 m/s^2 (10...2000 Hz) min.
Operating temperature	-40°C / +120°C	-40°C / +120°C
Order code	XXS1SXXXX	XXB1MXXXX

Safety Parameters

- Analog output for monitoring functional safety
- SIL2, PL d safety certified
- Encoders for functional safety applications

Specifications	AM34S (singleturn)	AM34S (multiturn)
Supply voltage	5 V_{DC} +5 % / -5 %	5 V_{DC} +5 % / -5 %
Resolution singleturn + multiturn	16 bit singleturn	16 bit singleturn + 12 bit multiturn
Max. angular acceleration	100,000 rad/s^2	100,000 rad/s^2
Resistance to shocks (DIN EN 60068-2-27)	1,000 m/s^2 (6 ms)	1,000 m/s^2 (6 ms)
Resistance to vibration (DIN EN 60068-2-6)	300 m/s^2 (10...2,000 Hz) 100 m/s^2 (10...2,000 Hz) min.	300 m/s^2 (10...2,000 Hz) 100 m/s^2 (10...2,000 Hz) min.
Operating temperature	-40°C / +115°C	-40°C / +115°C
Security integrity level (EN IEC 61508, 62061, 61800-5-3)	SIL2	SIL2
Performance level (EN ISO 13849-1)	PL d	PL d
Functional safety architecture	Canal 1: SSI | Canal 2: sin/cos	Canal 1: BiSS-C | Canal 2: sin/cos
Electrical interface	1V_{pp} 2.5V_{DC} (differential signal - sin+cos) + SSI (RS422)	1V_{pp} 2.5V_{DC} (differential signal - sin+cos) + BiSS-C (RS422)
Resolution for safety function	512 sin+cos periods	512 sin+cos periods
Order code	XXSASXXXX	XXBAMXXXX

[1] 20 bit on request
[2] SSI gray on request

Inductive Sensing Encoder EnDAT® 2.2

ECI1118

(Singleturn encoder)

Order Code: E1S

Specifications:
- Inductive encoder system without integral bearing
- Purely serial EnDAT® 2.2 interface
- For machines with high demands on dynamics and robustness
- High system accuracy
- Digital data transmission
- Electronic type plate

EnDat 2.2

EQI1131

(Multiturn encoder)

Order Code: E1M

Specifications:
- Inductive encoder system without integral bearing
- Multiturn function via gearbox
- Purely serial EnDAT® 2.2 interface
- For machines with high demands on dynamics and robustness
- High system accuracy
- Digital data transmission
- Electronic type plate

EnDat 2.2

ECI1319 / EQI1331

(Single-/ Multiturn encoder)

Order Code: E3S / E3M

Specifications:
- Inductive encoder system without integral bearing
- Multiturn function via gearbox
- Purely serial EnDAT® 2.2 interface
- For machines with high demands on dynamics and robustness
- High system accuracy
- Digital data transmission
- Electronic type plate

EnDat 2.2

Specifications	ECI1118	EQI1131	ECI1319	EQI1331
Encoder type	inductive	inductive	inductive	inductive
Position values / revolution	262,144 18 bit	524,288 19 bit	524,288 19 bit	524,288 19 bit
Revolutions	-	4,096 12 bit	-	4,096 12 bit
Calculation time t_{cal}	≤ 6 µs	≤ 5 µs	≤ 5 µs	≤ 5 µs
Clock frequency	≤ 8 MHz	≤ 16 MHz	≤ 16 MHz	≤ 16 MHz
System accuracy	± 120"	± 120"	± 65"	± 65"
Maximum operating temperature	+ 115 °C - 20 °C	+ 110 °C - 40 °C	+ 115 °C - 40 °C	+ 115 °C - 40 °C
Mechanically permissible speed	15,000 rpm	12,000 rpm	15,000 rpm	12,000 rpm
Voltage supply	3.6 - 14 V_{DC}	3.6 - 14 V_{DC}	3.6 - 14 V_{DC}	3.6 - 14 V_{DC}
Max. power consumption	520 - 600 mW	700 - 850 mW	650 - 700 mW	750 - 850 mW
Currect consumption (typical) at 5 V	80 mA	115 mA	95 mA	115 mA
Multiturn	-	gearbox	-	gearbox
Vibration 55 Hz to 2,000 Hz Shock 6 ms	≤ 300 m/s² ≤ 1.000 m/s²		≤ 400 m/s² ≤ 2.000 m/s²	
Digital interface	EnDAT® 2.2	EnDAT® 2.2	EnDAT® 2.2	EnDAT® 2.2
Order code	XXE1SXXXX	XXE1MXXXX	XXE3SXXXX	XXE3MXXXX

Options HIPERFACE®

Capacitive Sensing Encoder - HIPERFACE®

SEK / SEL37

(Single-/ Multiturn encoder)

Order Code: H1S / H1M

Specifications:

- 16 sin/cos periods per revolution
- Absolute position with a resolution of 512 steps per revolution
- Measuring of 4,096 revolutions (multiturn)
- Programming of the position value
- HIPERFACE®-interface
- Electronic type label

Optical Sensing Encoder - HIPERFACE®

SKS / SKM36

(Single-/ Multiturn encoder)

Order Code: H2S / H2M

Specifications:

- 128 sin/cos periods per revolution
- Absolute position with a revolution of 4,096 steps per revolution
- Measuring of 4,096 revolutions (multiturn)
- Programming of the position value
- HIPERFACE®-interface
- Electronic type label

SRS / SRM50

(Single-/ Multiturn encoder)

Order Code: H3S / H3M

Specifications:

- 1,024 sin/cos periods per revolution
- Absolute position with a revolution of 32,768 steps per revolution
- Measuring of 4,096 revolutions (multiturn)
- Programming of the position value
- HIPERFACE®-interface
- Electronic type label

Specifications	SEK/SEL37	SKS/SKM36	SRS/SRM50
Number of sin/cos periods per revolution	16	128	1.024
Maximum number of turns	Single SEK 1 Multi SEL 4,096	Single SKS 1 Multi SKM 4,096	Single SRS 1 Multi SRM 4,096
Code type for absolute value	binary	binary	binary
Code sequence [1]	ascending	ascending	ascending
Measuring step during interpolation of the sin/cos signals (for 12 bit)	20 arc seconds	2.5 arc seconds	0.3 arc seconds
Maximum sin/cos signals interpretation error, integral non-linearity	± 288 arc seconds	± 80 arc seconds	± 45 arc seconds
Non-linearity of a sin/cos period differential non-linearity	± 144 arc seconds [2]	± 40 arc seconds [2]	± 7 arc seconds [2]
Output frequency	-	0 ... 65 kHz	0 ... 200 kHz
Resistance to shocks	100 g / 10 ms	100 g / 6 ms	100 g / 10 ms
Resistance to vibration	50 g / 10...2,000 Hz	50 g / 10...2,000 Hz	50 g / 10...2,000 Hz
Operating voltage range	7...12 V	7...12 V	7...12 V
Recommended supply voltage	8 V	8 V	8 V
Maximum operating current without load	< 50 mA	60 mA	80 mA
Available memory area within EEPROM 2048 [3]	1,792 bytes	1,792 bytes	1,792 bytes
Interface signals Process data cable = SIN, REFSIN, COS, REFCOS Parameter channel = RS 485	analog, differential digital	analog, differential digital	analog, differential digital
Maximum working temperature		+ 115 °C - 40 °C	
Order code	XXH1SXXXX XXH1MXXXX	XXH2SXXXX XXH2MXXXX	XXH3SXXXX XXH3MXXXX

Safety Norms		SKS/SKM36S	
Safety integrity level [4]	-	SIL2 (EN 61800-5-2 / EN 62061)	-
Category [4]	-	3 (EN ISO 13849-1)	-
Performance level [4]	-	PL d (EN ISO 13849-1)	-

1) For rotation of the shaft in clockwise direction when facing in the direction of "A"
2) In the nominal position ± 0.1 mm
3) When using the electronic nameplate in operative connection with numerical controls, consider the patent EP 425 912 B 2; use in operative connection with speed controllers is excluded from this rule.
4) Safety norms are only valid for motors with safely mounted encoders.

Options HIPERFACE DSL®

Capacitive Sensing Encoder - HIPERFACE DSL®

EES / EEM37

(Single- or Multiturn encoder)

Order code: D1S/D1M

Specifications:

- Absolute position with a resolution of 17 Bit
- Measuring of 4,096 revolutions (multiturn)
- Programming of the position value
- HIPERFACE DSL®-interface
- Electronic type label

Optical Sensing Encoder - HIPERFACE DSL®

EKS / EKM36

(Single- or Multiturn encoder)

Order code: D2S/D2M

Specifications:

- Absolute position with a resolution of 18 Bit
- Measuring of 4,096 revolutions (multiturn)
- Programming of the position value
- HIPERFACE DSL®-interface
- Electronic type label

EDS / EDM35

(Single- or Multiturn encoder)

Order code: D3S/D3M

Specifications:

- Absolute position with a resolution of 24 Bit
- Optical motor feedback system
- Measuring of 4,096 revolutions (multiturn)
- Programming of the position value
- HIPERFACE DSL®-interface
- Electronic type label

Specifications	EES/EEM37	EKS/EKM36	EDS/EDM35
Maximum number of turns	Single EES 1 Multi EEM 4.096	Single EKS 1 Multi EKM 4.096	Single EDS 1 Multi EDM 4.096
Code type for absolute value	binary	binary	binary
Code sequence [1]	ascending	ascending	ascending
System accuracy	± 160 arc seconds	± 120 arc seconds	± 25 arc seconds
Resistance to shocks	100 g / 6 ms	100 g / 6 ms	100 g / 6 ms
Resistance to vibration	50 g / 10...2,000 Hz	50 g / 10...2,000 Hz	50 g / 10...2,000 Hz (according to EN 60068-2-6)
Operating voltage range	7...12 V	7...12 V	7...12 V
Recommended supply voltage	-	8 V	-
Maximum operating current without load	150 mA	150 mA	150 mA
Available memory area within EEPROM 2048 [2]	8,192 byte	8,192 byte	8,192 byte
Resolution	17 bit	18 bit	24 bit
Maximum working temperature	+ 115 °C - 40 °C	+ 115 °C - 20 °C	+ 115 °C - 40 °C
Order code	XXD1SXXXX XXD1MXXXX	XXD2SXXXX XXD2MXXXX	XXD3SXXXX XXD3MXXXX

Safety Norms	EES/EEM37	EKS/EKM36-2
Safety integrity level [3]	SIL2 (EN 61800-5-2 / EN 62061)	SIL2 (EN 61800-5-2 / EN 62061)
Category [3]	3 (EN ISO 13849-1)	3 (EN ISO 13849-1)
Performance level [3]	PL d (EN ISO 13849-1)	PL d (EN ISO 13849-1)

1) For rotation of the shaft in clockwise direction when facing in the direction of "A"
2) When using the electronic nameplate in operative connection with numerical controls, consider the patent EP 425 912 B 2; use in operative connection with speed controllers is excluded from this rule.
3) Safety norms are only valid for motors with safely mounted encoders.

Options
SSI / BiSS-C / Incremental Encoder

Absolute Encoder SSI / BiSS-C

HES1-002

Order code: M2S

Specifications:
- Singleturn encoder with a resolution of 12 bit
- SSI interface differential and single-ended
- Differential sin/cos signals with 1.0 V_{p-p}

HEM1-001

Order code: M1M

Specifications:
- Multiturn encoder with a total resolution of 32 bit
- Singleturn encoder with a resolution of 12 bit
- SSI interface differential and single-ended
- Differential sin/cos signals with 1.0 V_{p-p}
- External battery connector

HEM1-002[1)]

Order code: M2M

Specifications:
- Multiturn encoder with a total resolution of up to 32 bit
- Singleturn encoder with a resolution of 12 bit
- BiSS interface differential and single-ended
- Differential sin/cos signals with 1.0 V_{p-p}
- Battery on board

Incremental Encoder

HES3

Order code: M3I

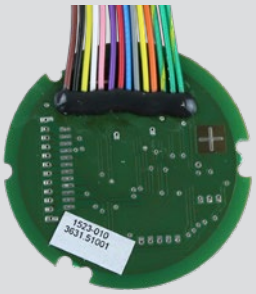

Specifications:
- Commutation and incremental signals ABZ, differential and single-ended
- 2048 PPR[2)]

[1)] Further information for your application upon request.
[2)] Pulses Per Revolution
4 x PPR = Counts Per Revolution (CPR)

Specifications (according to DIN 32878)	HES1-002	HEM1-001	HEM1-002	HES3
Power supply voltage	5.0 V_{DC} ± 10%	5.0 V_{DC} ± 10%	5.0 V_{DC} ± 10%	5.0 V_{DC} ± 10%
Maximum output current	50 mA	50 mA	50 mA	50 mA
Resolution singleturn	12 Bit 0,088°	12 Bit 0,088°	12 Bit 0,088°	0,044°
Number of turns	-	20 bit	20 bit	-
Backup battery for multiturn encoder	-	external	on board	-
SSI / BiSS interface	SSI differential & single ended gray coded	SSI differential & single ended binary coded	BiSS differential & single ended binary coded	-
Maximum SSI / BiSS operating frequency	4 MHz	4 MHz	10 MHz	-
Sin/cos signals	differential	differential	differential	-
Number of sin/cos periods per turn	1	1	1	-
Amplitude sin/cos	1.0 V_{p-p}	1.0 V_{p-p}	1.0 V_{p-p}	-
Incremental signals ABZ (PPR)*	-	-	-	differential (2048)
High-level output voltage ABZ	-	-	-	min. 2.8 V
Low-level output voltage ABZ	-	-	-	max. 0.4 V
Commutation signals	-	-	-	differential
Commutation high-level output voltage (UVW)	-	-	-	min. 2.8 V
Commutation low-level output voltage (UVW)	-	-	-	max. 0.4 V
Maximum working temperature	+ 125 °C - 30 °C			
Permissible relative humidity	15 to 85 % without condensation			
Order code segment	XXM2SXXXX	XXM1MXXXX	XXM2MXXXX	XXM3IXXXX

* Pulses Per Revolution
4 x PPR = Counts Per Revolution (CPR)

Option Holding Brake

Any HeiMotion Dynamic NG motor can be equipped with a permanent-magnet DC holding brake. The standard motors are not suiteable for dynamic brakes.

Insulation class:	F (155 °C)
Maximum speed:	10,000 rpm
Voltage supply:	24 V_{DC} + 6 % / -10 %

Specifications Brake	HMD06			HMD08			
	-011	-019	-026	-024	-032	-042	-057
Moment of inertia motor with brake * [kg-cm²]	3.47E-01	5.73E-01	8.00E-01	1.04E+00	1.37E+00	1.71E+00	2.36E+00
Static braking torque min. at 20°C [Nm]	2.0	2.0	2.0	4.5	4.5	4.5	4.5
Dynamic braking torque at 20°C [Nm]	1.7	1.7	1.7	3.8	3.8	3.8	3.8
Rated input power at rated voltage and 20°C [W]	11	11	11	12	12	12	12
Working voltage [V_{DC}]	24	24	24	24	24	24	24
Input current brake at 20°C [A]	0.46	0.46	0.46	0.50	0.50	0.50	0.50
Energy rating [kJ]	410	410	410	580	580	580	580
Separating time brake [ms]	≤40	≤40	≤40	≤ 38	≤ 38	≤38	≤38
Brake delay [ms]	≤3	≤3	≤3	≤3	≤3	≤3	≤3
Application delay time [ms]	≤15	≤15	≤15	≤20	≤20	≤20	≤20
Weight of motor with brake * [kg]	1.55	1.95	2.35	3.15	3.55	3.95	5.05
Slipping time ** [s]	0,5	0.5	0.5	0.5	0.5	0.5	0.5
Idle time ** [s]	0,5	0.5	0.5	0.5	0.5	0.5	0.5
Speed ** [min⁻¹]	100	100	100	100	100	100	100
Cycle quantity ** [-]	5	5	5	5	5	5	5

Specifications brake	HMD10				HMD13		
	-039	-057	-076	-105	-133	-190	-245
Moment of inertia motor with brake * [kg-cm²]	2.62E+00	3.43E+00	4.25E+00	5.89E+00	1.01E+01	1.39E+01	2.32E+01
Static braking torque min. at 20°C [Nm]	9.0	9.0	9.0	9.0	20.0	20.0	36.0
Dynamic braking torque min. at 20°C [Nm]	7.5	7.5	7.5	7.5	15.0	15.0	30.0
Rated input power at rated voltage and 20°C [W]	18	18	18	18	28	28	26
Working voltage [V_{DC}]	24	24	24	24	24	24	24
Input current brake at 20°C [A]	0.75	0.75	0.75	0.75	1.17	1.17	1.08
Energy rating [kJ]	890	890	890	890	1,290	1,290	2,900
Separating time brake [ms]	≤70	≤70	≤70	≤70	≤90	≤90	≤135
Brake delay [ms]	≤3	≤3	≤3	≤3	≤3	≤3	≤7
Application delay time [ms]	≤30	≤30	≤30	≤30	≤35	≤35	≤35
Weight of motor with brake * [kg]	5.50	6.00	6.50	7.50	9.50	12.10	16.50
Slipping time ** [s]	0.5	0.5	0.5	0.5	0.5	0.5	0.5
Idle time ** [s]	0.5	0.5	0.5	0.5	0.5	0.5	0.5
Speed ** [min⁻¹]	100	100	100	100	75	75	50
Cycle quantity ** [-]	5	5	5	5	5	5	3

Specifications brake	HMD15 -036	HMD15 -043	HMD15 -049	HMD19 -051	HMD19 -078	HMD19 -105
Moment of inertia motor with brake * [kg-cm^2]	4.69E+01	5.63E+01	7.01E+01	8.23E+01	1.60E+02	1.95E+02
Static braking torque min. at 20°C [Nm]	45.0	45.0	65.0	65.0	115.0	115.0
Dynamic braking torque at 20°C [Nm]	24.0	24.0	35.0	35.0	70.0	70.0
Rated input power at rated voltge and 20°C [W]	21	21	28	40	50	50
Working voltage [V_{DC}]	24	24	24	24	24	24
Input current brake at 20°C [A]	0.853	0.853	1.16	1.67	2.08	2.08
Energy rating [kJ]	2,600	2,600	4,500	4,500	13,000	13,000
Separating time brake [ms]	≤200	≤200	≤200	≤200	≤190	190
Brake delay [ms]	6	6	10	10	12	12
Application delay time [ms]	≤50	≤50	≤50	≤50	65	65
Weight of motor with brake * [kg]	22.0	26.0	31.5	40.0	51.5	61.5
Slipping time ** [s]	0.5	0.5	0.5	0.5	0.5	0.5
Idle time ** [s]	0.5	0.5	0.5	0.5	0.5	0.5
Speed ** [min^{-1}]	50	50	25	25	15	15
Cycle quantity ** [-]	3	3	3	3	3	3

* Incl. all attachment parts
** In order to ensure the optimum function of the brake at all times, it is recommended that the respective maintenance cycle (refreshment) be carried out when the brake is first put into operation and at four-week intervals.

Option Connector Y-Tec
Oder Code: Y17

Power

Pin	Function
A	U
B	V
C	W
Ground.	PE
1	Temp + [2]
2	Temp - [2]
3	Brake + [1]
4	Brake - [1]
5	-

1) If applicable
2) Only with, HES3 and HEM1-001

Signal Resolver

Pin	Function
1	cos +
2	cos - / refcos
3	sin +
4	sin- / refsin
5	R1 (ref +)
6	R2 (ref -)
7	-
8	-
9	Temp +
10	Temp -
11	-
12	-

Signal HIPERFACE®

Pin	Function
1	cos +
2	cos - / refcos
3	sin +
4	sin- / refsin
5	Data +
6	Data -
7	Us
8	GND
9	Temp +
10	Temp -
11	-
12	-

Signal SSI/BiSS

Pin	Function
1	cos +
2	cos - / refcos
3	sin +
4	sin- / refsin
5	V_{CC} / 5 V
6	GND
7	Data +
8	Data -
9	CLK +
10	CLK -
11	Temp + [3]
12	Temp - [4]

3) Battery + at HEM1-001
4) Battery - at HEM1-001

Signal EnDAT® 2.2

Pin	Function
1	-
2	-
3	-
4	-
5	U_p
6	GND / 0 V
7	Data +
8	Data -
9	CLK +
10	CLK -
11	Temp +
12	Temp -

Motor Connector

View mating face

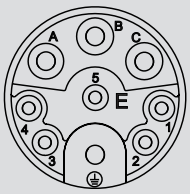

9-pole
9 x Ø 1 mm (3+PE+5)

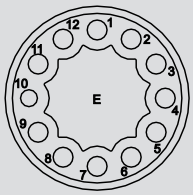

12-pole
12 x Ø 1 mm

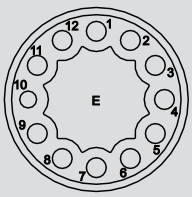

12-pole
12 x Ø 1 mm

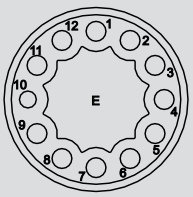

12-pole
12 x Ø 1 mm

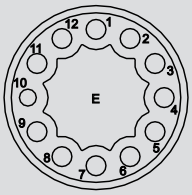

12-pole
12 x Ø 1 mm

Mating Connector

View mating face

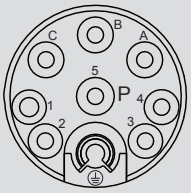

Intercontec type designation
ESTA 202 NN00 34 0500 000
(Cable clamping range
10.5 - 12 mm)

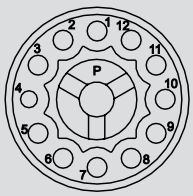

Intercontec type designation
ESTA 002 NN00 33 0001 000
(Cable clamping range
8.5 - 10.5 mm)

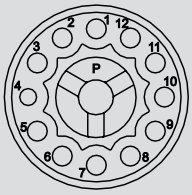

Intercontec type designation
ESTA 002 NN00 33 0001 000
(Cable clamping range
8.5 - 10.5 mm)

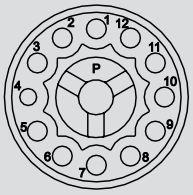

Intercontec type designation
ESTA 002 NN00 33 0001 000
(Cable clamping range
8.5 - 10.5 mm)

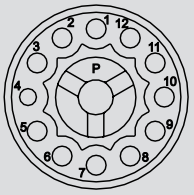

Intercontec type designation
ESTA 002 NN00 33 0001 000
(Cable clamping range
8.5 - 10.5 mm)

Signal Incremental

Pin	Function
1	Z
2	$\overline{Z}$
3	A
4	$\overline{A}$
5	B
6	$\overline{B}$
7	$\overline{U}$ ($\overline{R}$)
8	U (R)
9	$\overline{V}$ ($\overline{S}$)
10	V (S)
11	$\overline{W}$ ($\overline{T}$)
12	W (T)
A	V_{CC} / 5 V
B	GND
C	-

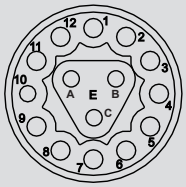

15-pole
15 x Ø 1 mm

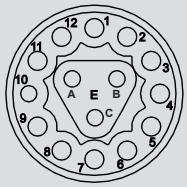

15-pole
15 x Ø 1 mm

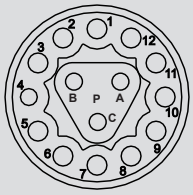

Intercontec type designation
ESTA 205 NN00 33 0001 000
(Cable clamping range
8.5 - 10.5 mm)

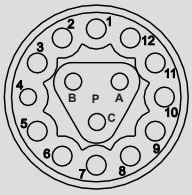

Intercontec type designation
ESTA 205 NN00 33 0001 000
(Cable clamping range
8.5 - 10.5 mm)

Mating connector with metal gland
as shown or with plastic gland.

Motor Connector Angled receptacle Y-Tec, rotatable

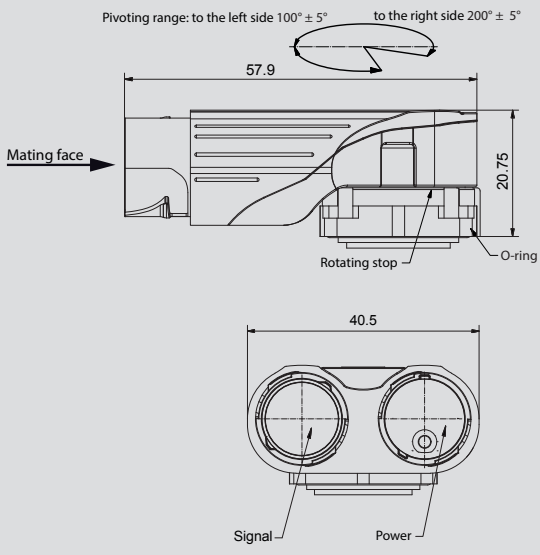

Mating connector

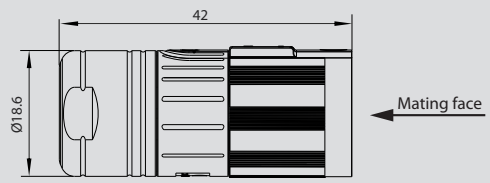

Connector

Option Connector M23
Oder Code: W23

Power

Pin	Function
A	Brake + [1]
B	Brake - [1]
C	Temp +
D	Temp -
1	U
4	V
3	W
Ground.	PE

1) If applicable
2) Battery + at HEM1-001
3) Battery - at HEM1-001

Signal Resolver

Pin	Function
1	cos +
2	cos - / refcos
3	sin +
4	sin - / refsin
5	-
6	R1 (ref +)
7	R2 (ref -)
8	-
9	-
10	-
11	Temp +
12	Temp -

Signal HIPERFACE®

Pin	Function
1	cos +
2	cos - / refcos
3	sin +
4	sin - / refsin
5	-
6	-
7	GND
8	-
9	US
10	Data +
11	Data -
12	-
13	-
14	Temp +
15	Temp -
16	-
17	-

Signal SSI/BiSS

Pin	Function
1	cos +
2	cos - / refcos
3	sin +
4	sin - / refsin
5	V_{CC} / 5 V
6	GND
7	Data +
8	Data -
9	CLK +
10	CLK -
11	Temp +
12	Temp -
13	- [2]
14	- [3]
15	-
16	-
17	-

Signal EnDAT® 2.2

Pin	Function
1	-
2	-
3	-
4	-
5	U_p
6	GND/0V
7	Data +
8	Data -
9	Clock +
10	Clock -
11	Temp +
12	Temp -
13	-
14	-
15	-
16	-
17	-

Motor Connector

View mating face

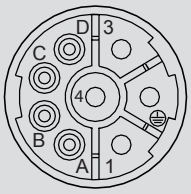

8-pole
4 x Ø 2 mm (3+PE)
+ 4 x Ø 1 mm

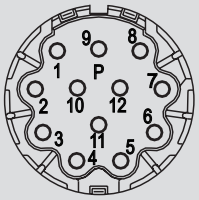

12-pole
12 x Ø 1 mm, 0° coded

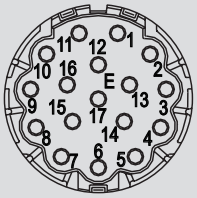

17-pole
17 x Ø 1 mm, 0° coded

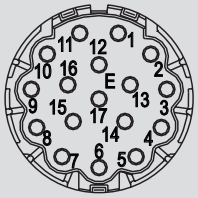

17-pole
17 x Ø 1 mm, 0° coded

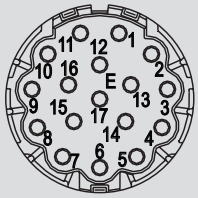

17-pole
17 x Ø 1 mm, 0° coded

Mating connector

View mating face

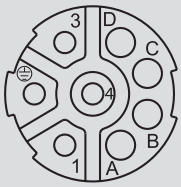

Intercontec type designation
BSTA 078 NN00 42 0100 000
(Cable clamping range
9.5-14.5 mm)

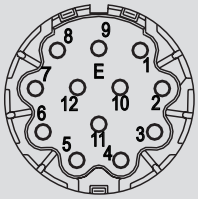

Intercontec type designation
ASTA 013 NN00 41 0100 000
(Cable clamping range
6-10 mm)

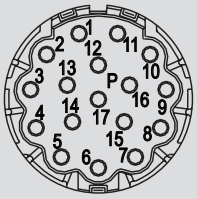

Intercontec type designation
ASTA 014 NN00 41 0100 000
(Cable clamping range
6-10 mm)

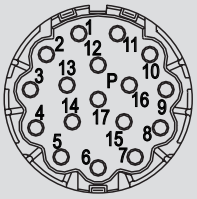

Intercontec type designation
ASTA 014 NN00 41 0100 000
(Cable clamping range
6-10 mm)

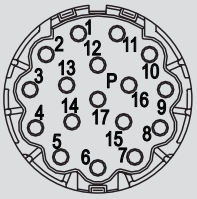

Intercontec type designation
ASTA 014 NN00 41 0100 000
(Cable clamping range
6-10 mm)

Signal Incremental

Pin	Function
1	Z
2	$\overline{Z}$
3	A
4	$\overline{A}$
5	B
6	$\overline{B}$
7	U (R)
8	$\overline{U}$ ($\overline{R}$)
9	V (S)
10	$\overline{V}$ ($\overline{S}$)
11	W (T)
12	$\overline{W}$ ($\overline{T}$)
13	V_{CC} / 5 V
14	GND
15	Temp +
16	Temp -
17	-

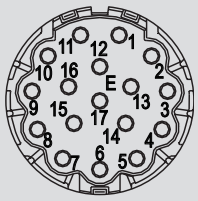

17-pole
17 x Ø 1 mm, 0° coded

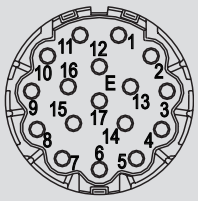

17-pole
17 x Ø 1 mm, 0° coded

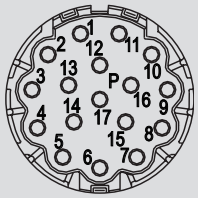

Intercontec type designation
ASTA 014 NN00 41 0100 000
(Cable clamping range
6-10 mm)

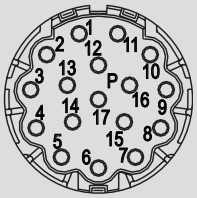

Intercontec type designation
ASTA 014 NN00 41 0100 000
(Cable clamping range
6-10 mm)

Motor Connector

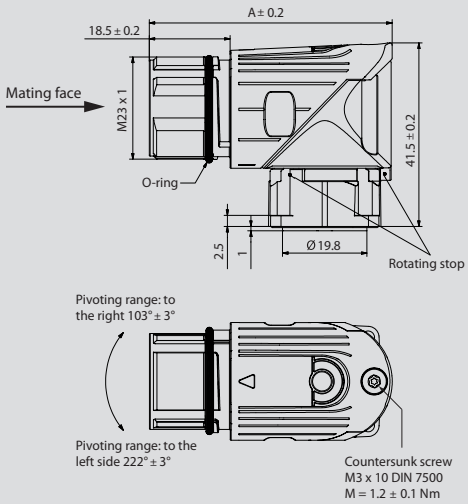

Mating Connector

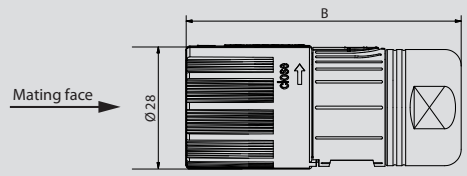

Connector type	A	B
Signal	55.6	59
Power	55.3	78

Option Connector M40 + M23

Power

Pin	Function
+	Brake + *
-	Brake - *
1	Temp +
2	Temp -
U	U
V	V
W	W
Ground.	PE

* If applicable

Signal Resolver

Pin	Function
1	cos +
2	cos - / refcos
3	sin +
4	sin - / refsin
5	-
6	R1 (ref +)
7	R2 (ref -)
8	-
9	-
10	-
11	Temp +
12	Temp -

Signal HIPERFACE®

Pin	Function
1	cos +
2	cos - / refcos
3	sin +
4	sin - / refsin
5	-
6	-
7	GND
8	-
9	US
10	Data +
11	Data -
12	-
13	-
14	Temp +
15	Temp -
16	-
17	-

Signal SSI/BiSS

Pin	Function
1	cos +
2	cos - / refcos
3	sin +
4	sin - / refsin
5	V_{CC} / 5 V
6	GND
7	Data +
8	Data -
9	CLK +
10	CLK -
11	Temp +
12	Temp -
13	-
14	-
15	-
16	-
17	-

Signal EnDAT® 2.2

Pin	Function
1	-
2	-
3	-
4	-
5	U_p
6	GND / 0 V
7	Data +
8	Data -
9	CLK +
10	CLK -
11	Temp +
12	Temp -
13	-
14	-
15	-
16	-
17	-

Motor Connector

View mating face

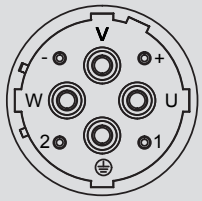

8-pole
4 x Ø 3.6 mm (3+PE)
+ 4 x Ø 2 mm

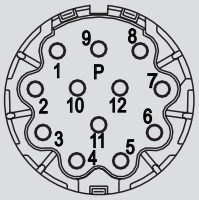

12-pole
12 x Ø 1 mm, 0° coded

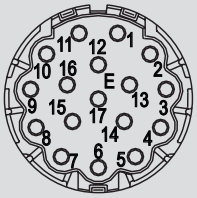

17-pole
17 x Ø 1 mm, 0° coded

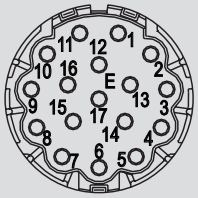

17-pole
17 x Ø 1 mm, 0° coded

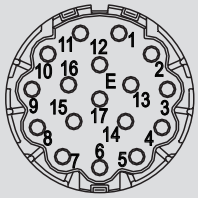

17-pole
17 x Ø 1 mm, 0° coded

Mating Connector

View mating face

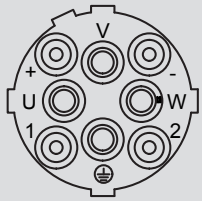

Intercontec type designation
CSTA 264 NN00 4400 20000
(Cable clamping range
9-16 mm)

Intercontec type designation
ASTA 013 NN00 41 0100 000
(Cable clamping range
6-10 mm)

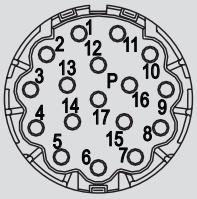

Intercontec type designation
ASTA 014 NN00 41 0100 000
(Cable clamping range
6-10 mm)

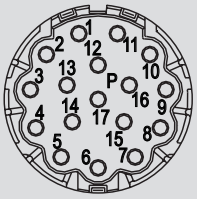

Intercontec type designation
ASTA 014 NN00 41 0100 000
(Cable clamping range
6-10 mm)

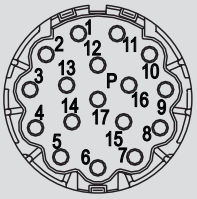

Intercontec type designation
ASTA 014 NN00 41 0100 000
(Cable clamping range
6-10 mm)

Signal Incremental

Pin	Function
1	Z
2	$\overline{Z}$
3	A
4	$\overline{A}$
5	B
6	$\overline{B}$
7	U (R)
8	$\overline{U}$ ($\overline{R}$)
9	V (S)
10	$\overline{V}$ ($\overline{S}$)
11	W (T)
12	$\overline{W}$ ($\overline{T}$)
13	V_{CC} / 5 V
14	GND
15	Temp +
16	Temp -
17	-

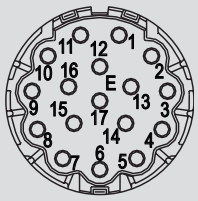

17-pole
17 x Ø 1 mm, 0° coded

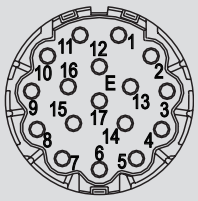

17-pole
17 x Ø 1 mm, 0° coded

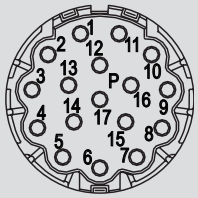

Intercontec type designation
ASTA 014 NN00 41 0100 000
(Cable clamping range
6-10 mm)

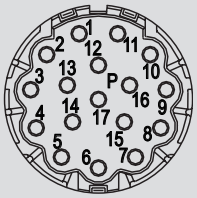

Intercontec type designation
ASTA 014 NN00 41 0100 000
(Cable clamping range
6-10 mm)

Power Connector M40

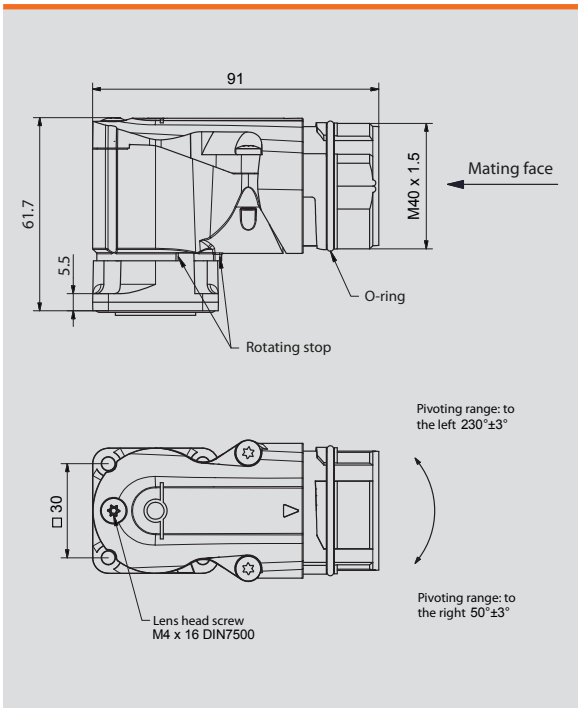

Mating Connector

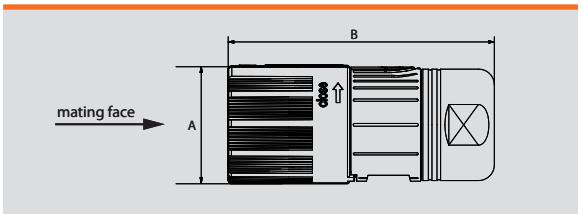

Connector type	A	B
Signal	Ø 28	59
Power	Ø 46	99

Connector

Terminal Box
Order Code: KB0/KB2/KA0/KA2

Signal DSL

Pin	Function
1	-
2	-
3	-
4	-
5	-
6	-
7	-
8	US (DSL +)
9	GND (DSL -)
10	-
11	-
12	Brake +
13	-
14	-
15	-
16	-
17	-
18	-
19	Brake -

Signal Resolver

Pin	Function
1	cos +
2	cos -
3	sin +
4	sin -
5	Ref+
6	-
7	Ref-
8	-
9	-
10	-
11	-
12	Brake +
13	-
14	-
15	-
16	-
17	Temp +
18	Temp -
19	Brake -

Signal HIPERFACE®

Pin	Function
1	cos +
2	cos -
3	sin +
4	sin -
5	-
6	-
7	GND
8	-
9	US
10	Data +
11	Data -
12	Brake+
13	-
14	-
15	-
16	-
17	Temp +
18	Temp -
19	Brake -

Signal SSI/BiSS

Pin	Function
1	cos +
2	cos - / refcos
3	sin +
4	sin - / refsin
5	Battery+[1]
6	-
7	Battery-[1]
8	Data +
9	Data -
10	CLK+
11	CLK-
12	Brake +
13	-
14	-
15	Vcc/5V
16	GND
17	Temp +
18	Temp -
19	Brake -

Signal EnDAT® 2.2

Pin	Function
1	-
2	-
3	-
4	-
5	-
6	-
7	-
8	Data +
9	Data -
10	CLK +
11	CLK -
12	Brake +
13	-
14	-
15	Up
16	GND
17	Temp +
18	Temp -
19	Brake -

[1] Battery +/- for HEM1-001

Power

According to power connection terminal board (see picture below). Possible cable to be used: Heluca-ble TOPSERV 109 PUR 4 G 10 Art. No.: 75947
VDE 0298-4 must be considered when selecting cables.

Ring Tongue:
6,73 x 22,05
E-CU-galv. tinned
6,64 – 10,5 mm²

Bolt:
M6 x 25 brass according to DIN 933 / ISO 4017

Power connection terminal board

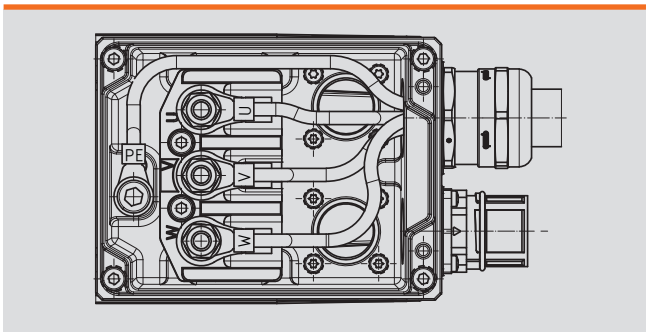

Oder code	Explanation
KA0	Connections in A-side direction without cable gland
KA2	Connections in A-side direction, with cable gland
KB0	Connections in B-side direction, without cable gland
KB2	Connections in B-side direction with cable gland

For UL approval, an S1 characteristic curve deviating by approx. 15 % applies. The specifications on the nameplates correspond to the UL values.

Signal Incremental

Pin	Function
1	Z
2	$\overline{Z}$
3	A
4	$\overline{A}$
5	B
6	-
7	$\overline{B}$
8	U (R)
9	-
10	V (S)
11	-
12	Brake +
13	W (T)
14	-
15	Vcc/5c
16	GND -
17	Temp +
18	Temp -
19	Brake -

Motor Connector

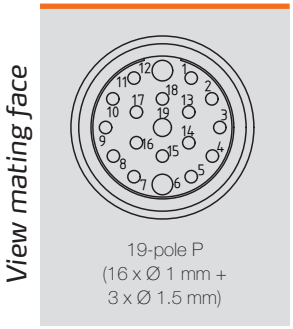

Mating Connector

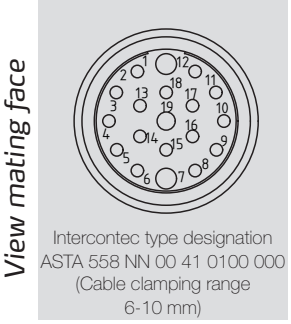

Mating Connector

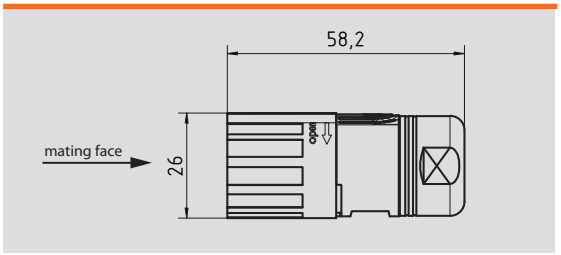

Cable Gland

Clamping range 13-18mm

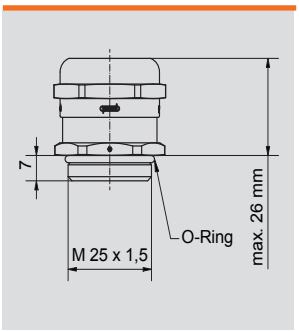

Cable gland - included for order codes KA2 and KB2.

Front View

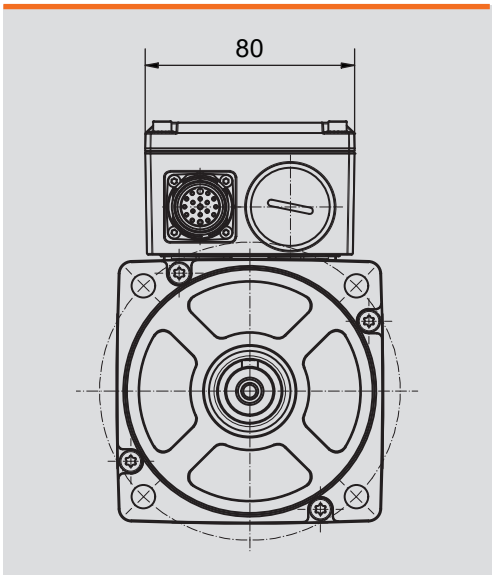

Mounting Direction

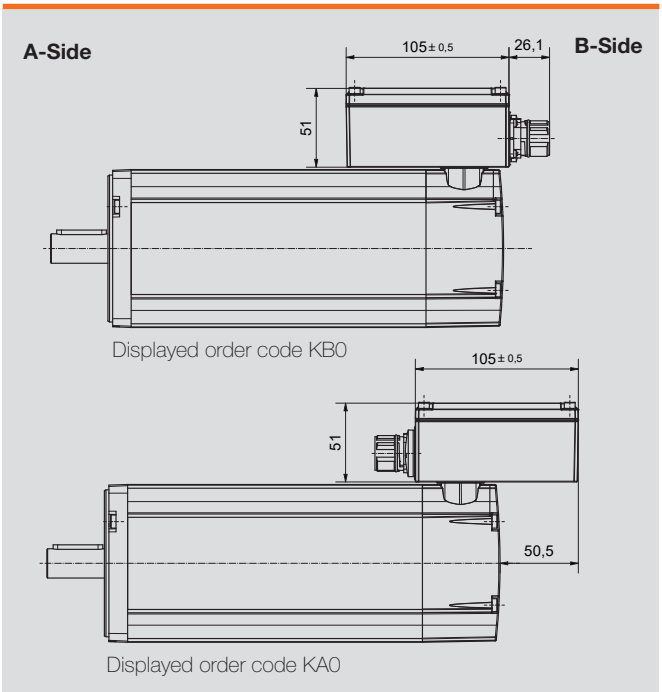

Option Connectors for One Cable Solution

I-Tec Connector

Order code: I17

Power / Signal

Pin	Function
A	U
B	V
C	W
Grounding	PE
1	U_S (DSL +)
2	GND (DSL -)
3	Brake + *
4	Brake - *
5	-

Motor Connector

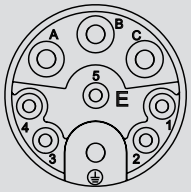

9-pole
9 x Ø 1 mm (3+PE+5)

Mating Connector

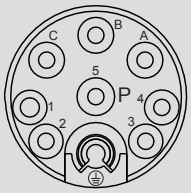

Intercontec type designation
ESTA 202 NN00 34 0500 000
(Cable clamping range 10.5 - 12 mm)

Motor Connector

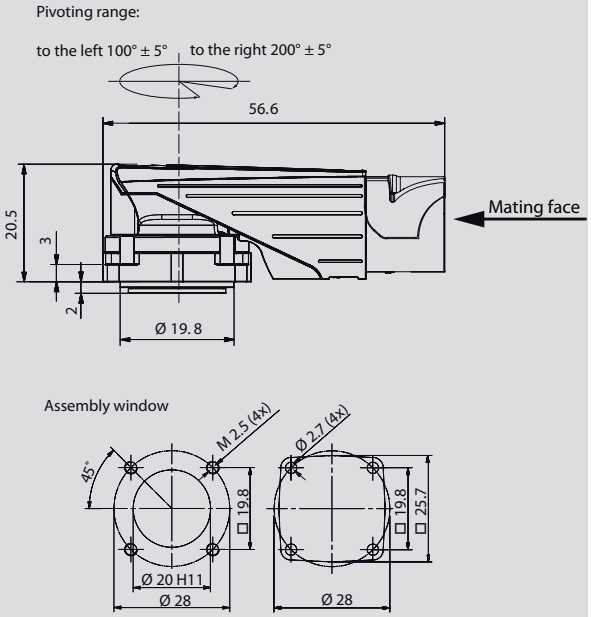

Mating Connector

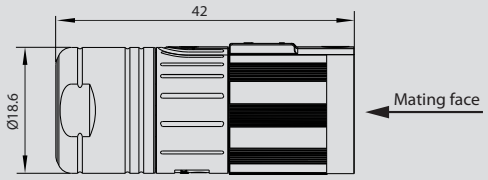

* If available

M23 Connector

for motor sizes 60 to 130

Power / Signal

Pin	Function
A	Brake + *
B	Brake - *
C	U_s (DSL+)
D	GND (DSL-)
1	U
4	V
3	W
Grounding	PE

Motor Connector

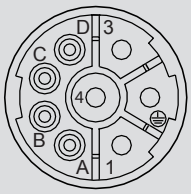

8-pole
4 x Ø 2mm (3+PE) + 4 x Ø 1mm

Motor Connector

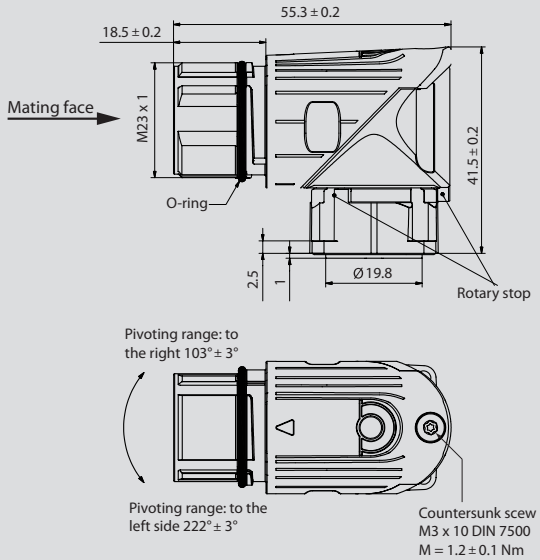

Mating Connector

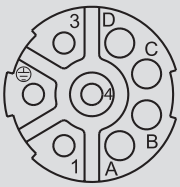

Intercontec type designation
BSTA 078 NN00 42 0100 000
(Cable clamping range 9.5 - 14.5 mm)

Mating Connector

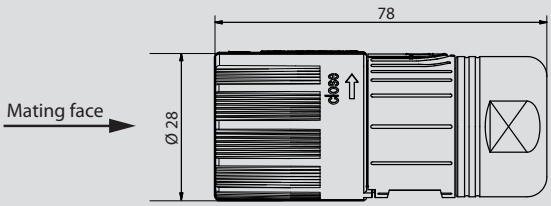

* If available

Option Connectors for One Cable Solution

M23 H-Tec (Hybrid) Connector

for motor size 150 and 190
Order code: I23

Power / Signal

Pin	Function
A	U
B	V
C	W
D	-
Grounding	PE
7	Brake + *
8	Brake - *
H	U_S (DSL +)
L	GND (DSL -)

Motor Connector

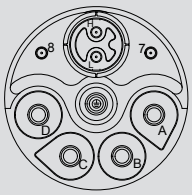

7-pole
5 x Ø 2 mm (4+PE)
+ 2 x Ø 1 mm

Motor Connector

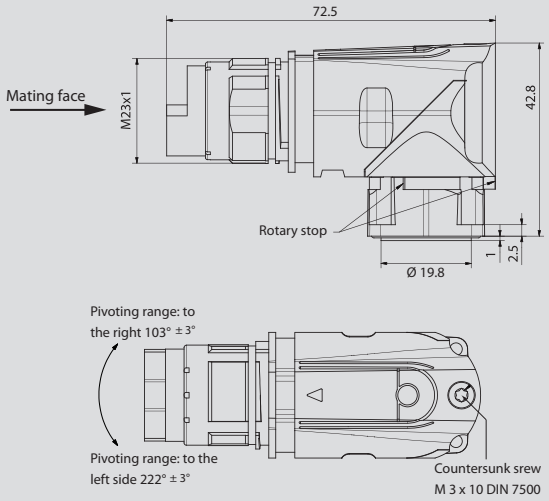

Mating Connector

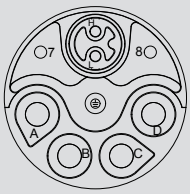

Intercontec type designation
H51A 425 NN00 59 0100 000
(Cable clamping range 14 - 17 mm)

Mating Connector

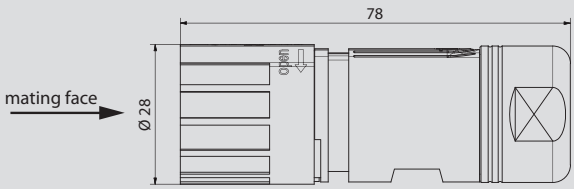

* If available

M40 H-Tec (Hybrid) Connector

for motor size 190
Order code: I40

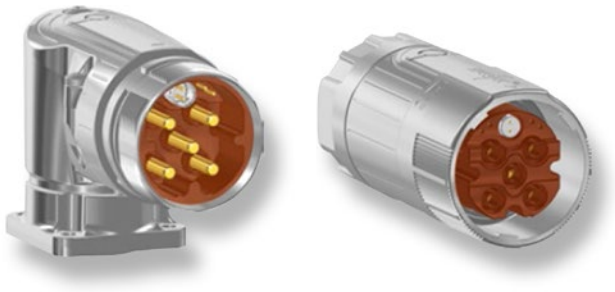

Power / Signal

Pin	Function
U	U
V	V
W	W
Grounding	PE
+	Brake + *
-	Brake - *
1	-
2	-
H	U_S (DSL +)
L	GND (DSL -)

Motor Connector

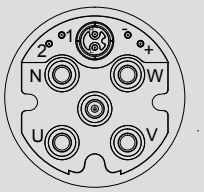

9-pole
5 x Ø 3,6 mm (4+PE)
+ 2 x Ø 1mm

Motor Connector

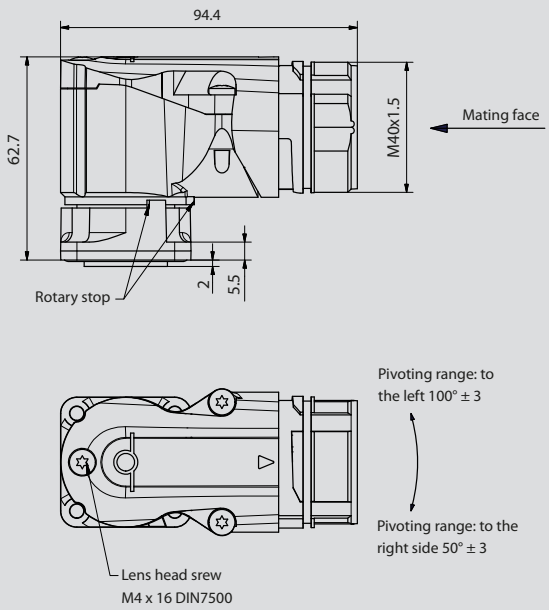

Mating Connector

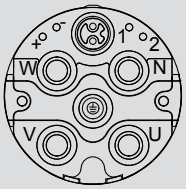

Intercontec type designation
H81A 501 NN00 45 0100 000
(Cable clamping range 16.5 - 25 mm)

Mating Connector

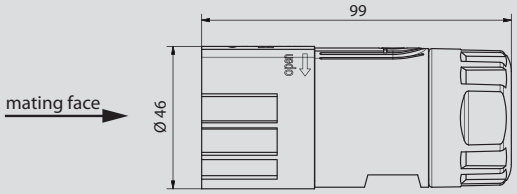

* If available

Connector

HCB Servo Drive

General Information

The compact single-axis servo drives of the HCB-series are true all-rounders in drive technology. They combine maximum power density with extensive motion control functions. The HCB-series consists of two sizes, which are divided into two power stages for the 1-phase units and three power stages for the 3-phase units.

All proven fieldbus interfaces are “on board“ – from CANopen® to EtherCAT® to PROFINET®, which promise problem-free communication. Its versatility is further underlined by the numerous encoder interfaces, also for single-cable solutions. Complex positioning tasks through linked position sets can be interconnected. The position-synchronous or speed-synchronous motion of various drives with variable gear ratios can be quickly parameterised via the software assistant. Rotary table applications, position triggers, rotor position triggers or switching cams – a wide range of dynamic application tasks can be handled via the integrated software functions.

In combination with the HeiMotion servo motors with encoder variant matched to your application and a gearbox from the HMPG series mounted in the gearbox direct attachment, you get a customized drive axis from a single source at an unbeatable price-performance ratio.

Connections / Inputs and Outputs

Connection	Function
X1	I/O communication
X2A	Resolver connection
X2B	Multi-encoder connection
X3	STO interface (STOA, STOB), limit switch (DIN6, DIN7) Dig. output (DOUT0)
X4	CANopen®
X6	Motor connection
X6A	Motor brake / HIPERFACE DSL® (HCB 3-phase)
X9	Voltage supply
X9A	Brake resistor (HCB 3-phase)
X9B	24V supply (HCB 3-phase)
X18	Ethernet interface
X19	USB interfae
X21	Realtime Ethernet interface

General Properties

Ambient Conditions

Ambient temperature in operation:	0 °C to +40 °C +40 °C to +50 °C with power reduction 2.5 % / K
Storage temperature:	-25 °C to +70 °C
Operating and storage humidity:	Relative humidity 90 % (without condensation)
Protection class:	IP20
Installation altitude:	Mounting height max. 2000 m above sea level, above 1000 m above sea level with power reduction 1 % per 100 m
Degree of pollution:	2
Type of installation	Installation in switch cabinet with at least protection class IP54

Functions*

- Safety function "Safe Torque Off" (STO)
- Realization of functionality SS1 possible
- Switching cams
- Direct control of the holding brake in the motor
- Automatic determination of motor parameters
- Position set-dependent synchronization possible
- Path program / linking
- Integrated position control
- Parameterizable belt locks

* Some functions are not available for all models.

Power cable

Length	Heidrive-No.
3 m	14-007-051-18-0
5 m	14-007-051-19-0
10 m	14-007-051-23-0

Signal cable (resolver)

Length	Heidrive-No.
3 m	14-007-051-60-0
5 m	14-007-051-62-0
10 m	14-007-051-67-0

Signal cable (HIPERFACE®)

Length	Heidrive-No.
3 m	14-007-051-78-0
5 m	14-007-051-80-0
10 m	14-007-051-85-0

HCB Servo Drive

Single-phase

Specifications

	HCB 2/6-1	HCB 4/12-1	HCB 8/24-1
Voltage supply	230 V_{AC} [± 10 %], 50...60 Hz		
Control voltage	24 V_{DC} [± 20 %] (0.35 A)		
DC link voltage	325 V_{DC} (with U_{mains} = 230 V_{AC})		
Output power	400 W	800 W	1.6 kW
Max. output power for 2 s	1 kW	2 kW	4.8 kW
Rated output current	2 A_{rms}	4 A_{rms}	8 A_{rms}
Max. output current for 2s	6 A_{rms}	12 A_{rms}	24 A_{rms}
Internal brake resistor	75 Ω		30 Ω
Continuous power / pulse power	bis 2 kW		6.4 kW
External brake resistor	75 Ω, max. 2 kW		≥ 30 Ω
Holding brake	24 V_{DC}, max. 2 A		
Dimensions servo drive H x W x D	200 x 50 x 163 mm 245 x 50 x 163 mm with mounting plate		230 x 67 x 200 mm 275 x 67 x 200 mm with mounting plate
Weight	1.5 kg		2.9 kg
Encoder evaluation	EnDAT® 2.2, HIPERFACE®, HIPERFACE DSL®, resolver, analog and digital incremental encoders with/without commutation signals, BiSS (Type C)		
Interfaces	USB 2.0, Ethernet, CAN bus, EtherCAT®, PROFINET®, MicroSD card		
Inputs / outputs	8 x digital in (24 V_{DC}), 2 x analog in (± 10 V) 3 x digital out (24 V_{DC})		
Product numbers	12-225-020-01-0	12-225-020-02-0	12-225-020-03-0

Dimensional Drawing HCB 2/6-1 and HCB 4/12-1

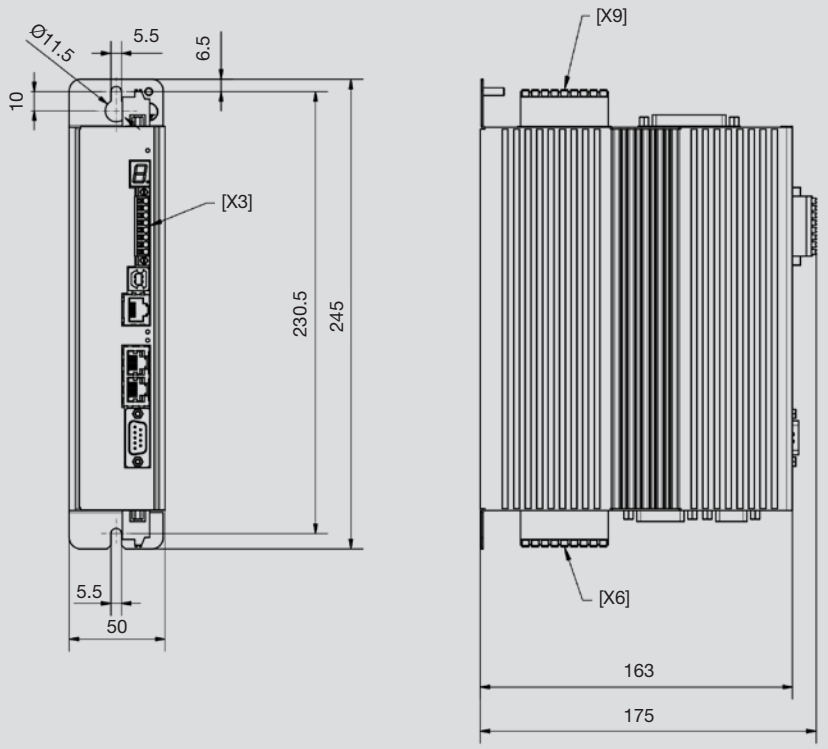

Dimensional Drawing HCB 8/24-1

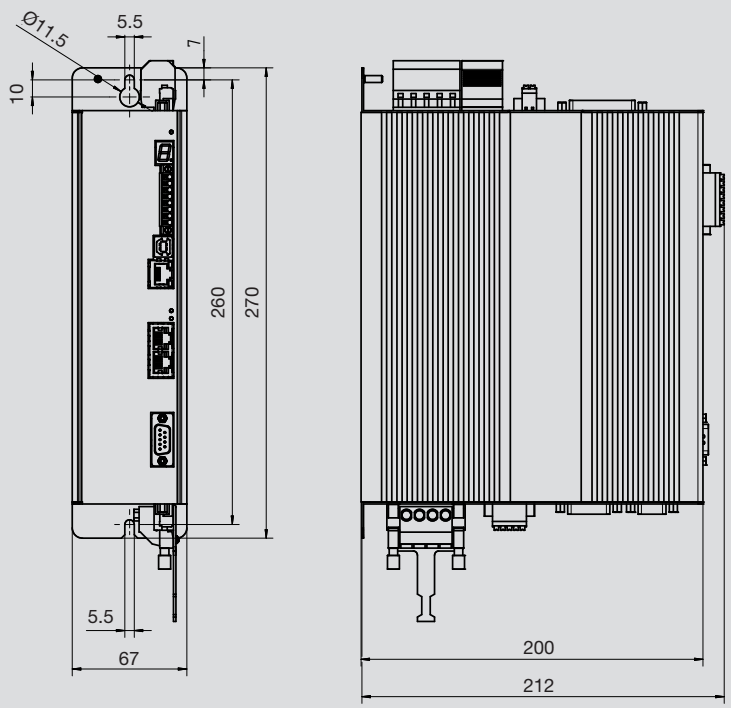

Drives

HCB Servo Drive

Three-phase

Specifications

	HCB 4/12-3	HCB 8/24-3	HCB 12/30-3	HCB 20/50-3	HCB 40/100-3
Voltage supply	3 x 230...480 V_{AC} [± 10 %], 45...66 Hz				
Control voltage	24 V_{DC} [± 20 %] (0.35 A)	24 V_{DC} [± 20 %] (0.45 A)	24 V_{DC} [± 20 %] (0.65 A)	24 V_{DC} [± 20 %] (max. 1 A)	
DC link voltage	565 V_{DC} (with U_{mains} = 400 V_{AC})				
Output power	1.6 kW	3.2 kW	4.8 kW	8 kW	16 kW
Max. output power for 2 s	4.8 kW	9.6 kW	12 kW	20 kW	40 kW
Rated output current	4 A_{rms}	8 A_{rms}	12 A_{rms}	20 A_{rms}	40 A_{rms}
Max. output current for 2s	12 A_{rms}	24 A_{rms}	30 A_{rms}	50 A_{rms}	100 A_{rms}
Internal brake resistor	30 Ω				15 Ω
Continuous power / pulse power	50 W to 24 kW			80 W	160 W
External brake resistor	≥ 30 Ω			15 Ω ≤ Rex ≥ 50 Ω	15 Ω ≤ Rex ≥ 50 Ω
Holding brake	24 VDC, max. 2A				
Dimensions servo drive H x W x D	230 x 67 x 200 mm 275 x 67 x 200 mm with mounting plate			351 x 90.5 x 256.5 mm 390 x 93 x 263 mm with mounting plate	351 x 162.5 x 256.5 mm 390 x 165 x 263 mm with mounting plate
Weight	2,9 kg			8,0 kg	13,5 kg
Encoder evaluation	EnDAT® 2.2, HIPERFACE®, HIPERFACE DSL®, resolver, analog and digital incremental encoders with/without commutation signals, BiSS (Type C)				
Interfaces	USB 2.0, Ethernet, CAN, EtherCAT®, PROFINET®, MicroSD card			USB 2.0, Ethernet, CAN, EtherCAT®, PROFINET®, MicroSD card, Ethernet Powerlink*	USB 2.0, Ethernet, CAN, EtherCAT®, PROFINET®, MicroSD card, Ethernet Powerlink*
Inputs / outputs	8 x digital in (24 V_{DC}), 2 x analog in (± 10 V) 3 x digital out (24 V_{DC})				
Product numbers	12-405-020-11-0	12-405-020-12-0	12-405-020-13-0	12-405-020-14-0	12-405-020-15-0

* On request.

Dimensional Drawing HCB 4/12-3, HCB 8/24-3, HCB 12/30-3

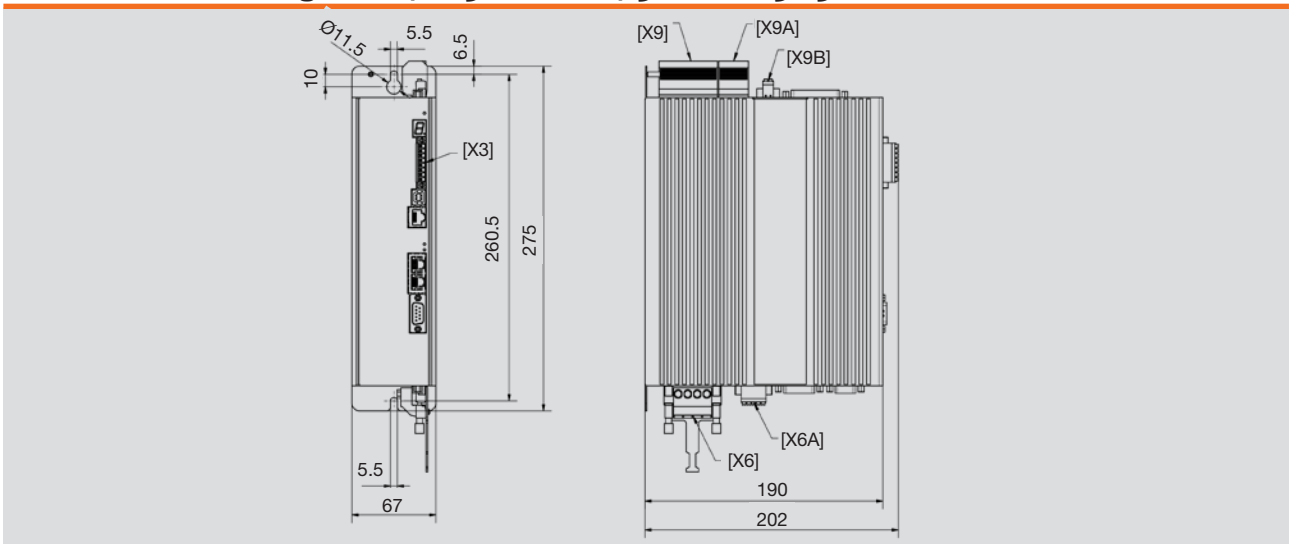

Dimensional Drawing HCB 20/50-3

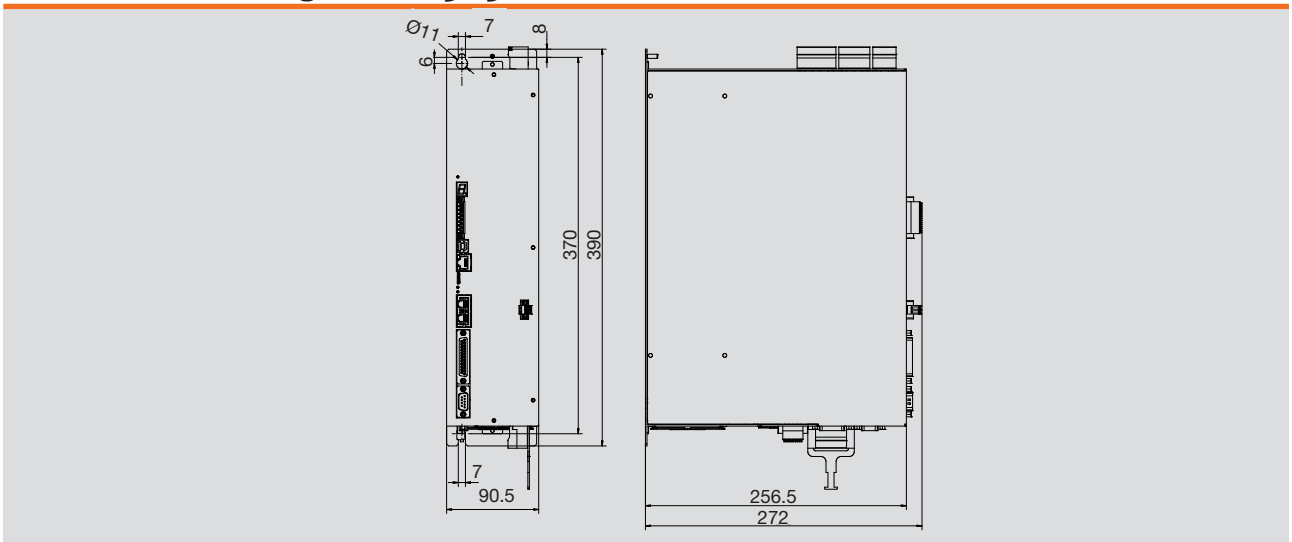

Dimensional Drawing HCB 40/100-3

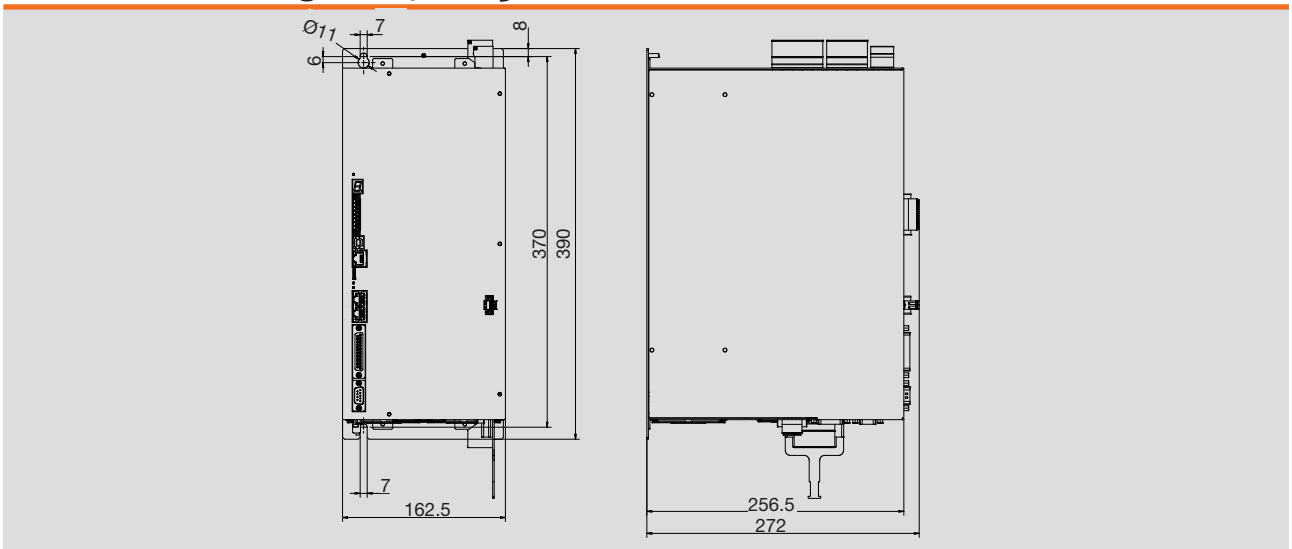

HCL Servo Drive

Introduction

In addition to the integrated controllers, the HCL servo controller series perfectly can be combined perfectly with our 24 V and 48 V motors of the HMD Next Generation series.

With a maximum current of up to 225 A peak, the controllers, in combination with our HMD servo-motors, offer an ideal solution for demanding tasks.

This solution delivers an extremely cost-efficient package that includes a certified STO interface and UL recognition.

Thanks to their freely programmable Motion Process Unit (MPU), the controllers are ideal for simple control tasks. An additional PLC is often not required. EtherCAT® or CANopen® are two of the most common and proven fieldbuses available for use with an external PLC.

Sizes

Ambient Conditions

Protection class	IP20 except clamps (IP00)
Accident prevention regulation	In conformity with local regulations (in Germany e. g. DGUV regulation 3)
Mounting method	Installation only for vertical mounting into a switch cabinet with protection class at least IP4x, if using the safety function STO at least IP54

Functions

- "Safe Torque Off (STO)" safety function
- Device status display via three LEDs
- Freely programmable MPU (**M**otion **P**rocess **U**nit)
  → simple PLC functionality
- Compact 4-quadrant controller
- Vector controlled
- Galvanically isolated fieldbus interfaces

Accessories

HCL Stick – USB/CAN Program Interface

The HCL stick connects the HCL CAN controller to your Windows® computer via its USB interface. This makes it easy to commission, parameterize and program the controller using the software tools that we provide for the controllers.

HCL Brake – Brake Chopper for Mains-Powered Systems

The HCL brake chopper effectively cuts overvoltages and redirects braking energy to an external load resistor. To protect all components in the DC link, the overvoltage threshold can be set using a DIP switch. The maximum peak braking current is 55 A when an external 1 Ohm load resistor is connected (not included in the scope of delivery).

HCL Servo Drive

60 C

Specifications	HCL 60 C
Electronic supply voltage U_e	18 - 30 V
Power supply voltage U_p	9 - 60 V
Maximal output current	42.5 A_{rms}
Continuous output current (UL/CE) ≤ 24 V	18.5 A_{rms}
Continuous output current (UL/CE) ≤ 60 V	18.5 A_{rms}
PWM frequency	32 KHz
PWM mode	SVPWM
Motor types	Brushless motors, linear motors
STO	Yes
Security integrity level (SIL)	SIL 3
Performance level (PL)	PL e
Fieldbus	CAN
Galvanically isolated	No
CAN protocol	DS301
Encoder supply	5 V / 0.2 A
Encoder evaluation	SSI / incremental encoder / BiSS
Number of inputs / outputs	6 digital IN / 3 digital OUT / 1 analog IN
Size	78 x 74 x 29 mm
Assembly	Wall mounted
Installation requirements	IP54
Maximum operating ambient temperature	-40 °C to 55 °C

Dimensional Drawing

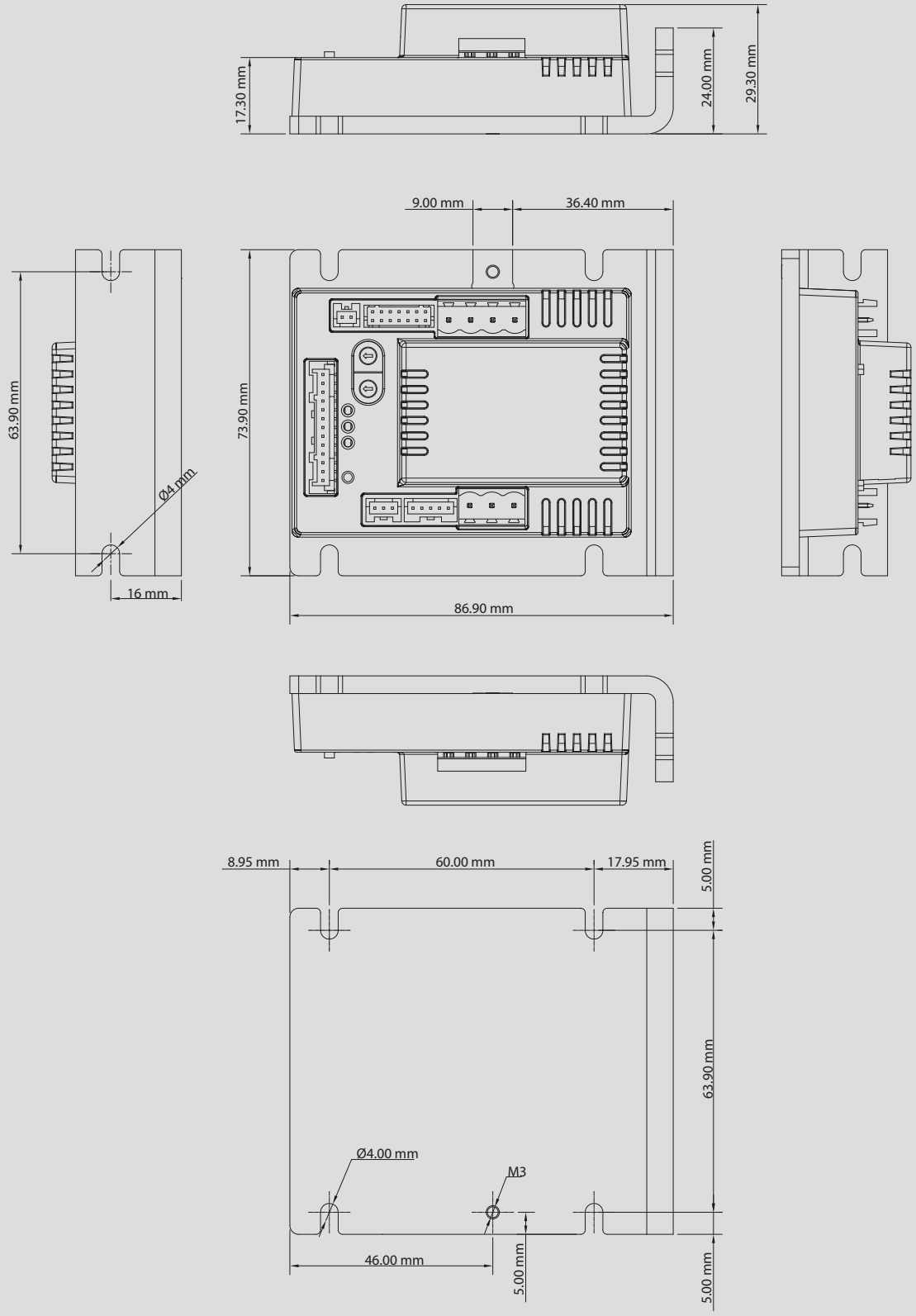

HCL Servo Drive

120 C / E

Specifications	HCL 120 C	HCL 120 E
Electronic supply voltage U_e	18 - 30 V	
Power supply voltage U_p	9 - 60 V	
Maximal output current	85 A_{rms}	
Continuous output current (UL/CE) ≤ 24 V	-	
Continuous output current (UL/CE) ≤ 60 V	18.5 A_{rms}	
PWM frequency	32 KHz	
PWM mode	SVPWM	
Motor types	Brushless motors, linear motors	
STO	Yes	
Security integrity level (SIL)	SIL 3	
Performance level (PL)	PL e	
Fieldbus	CAN	EtherCAT®
Galvanically isolated	No	Yes
CAN protocol	DS301	
Encoder supply	5 V / 0.2 A	
Encoder evaluation	SSI / incremental encoder / BiSS	
Number of inputs / outputs	6 digital IN / 3 digital OUT / 1 analog IN	
Size	87 x 74 x 29 mm	87 x 74 x 49 mm
Assembly	Wall mounted	
Installation requirements	IP54	
Maximum operating ambient temperature	-40 °C to 55 °C	

Dimensional Drawing HCL 120 C

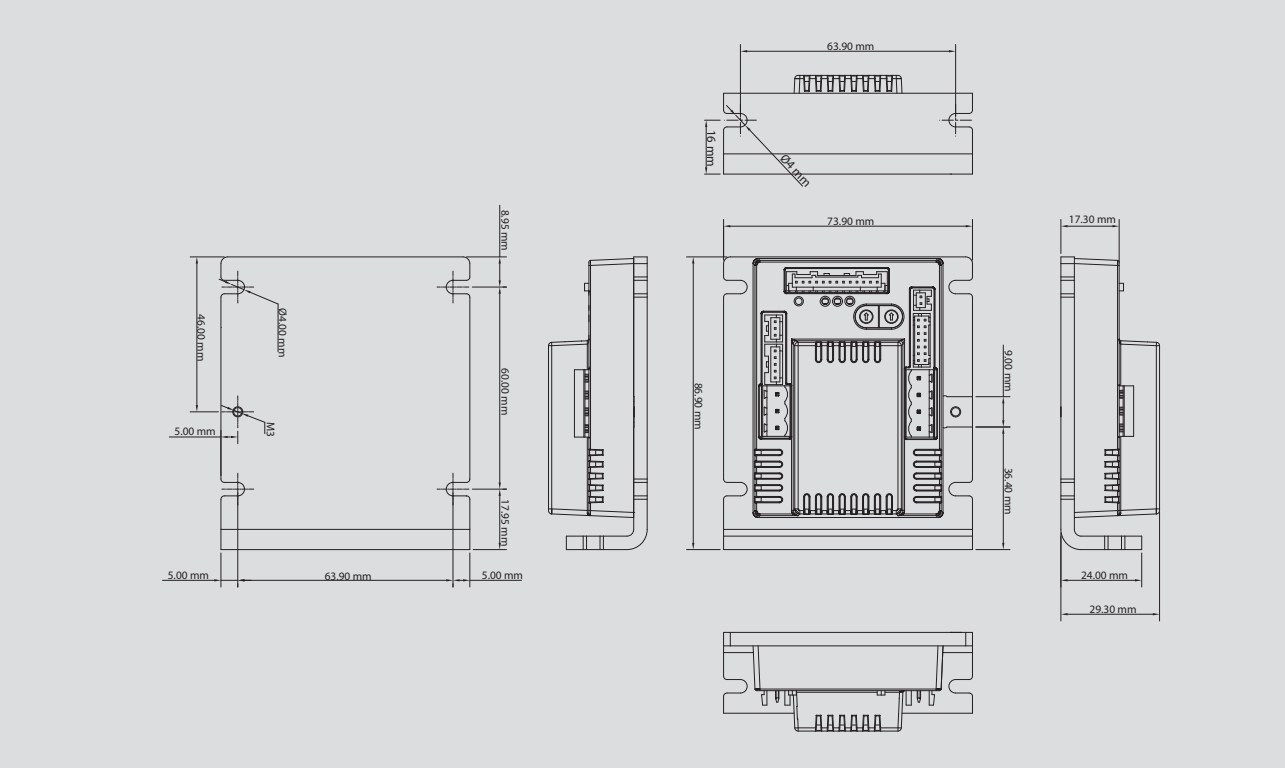

Dimensional Drawing HCL 120 E

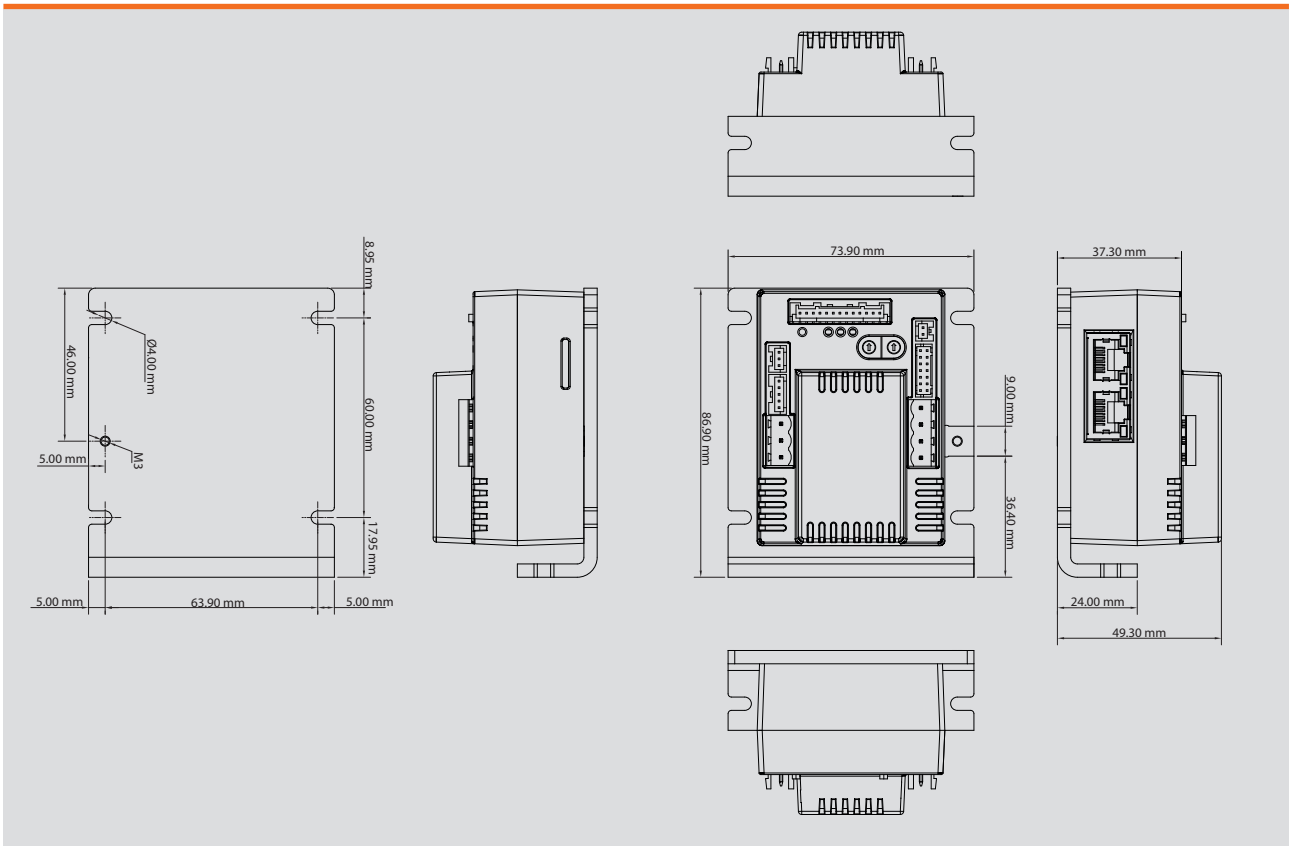

Drives

HCL Servo Drive

225 CS

Specifications	HCL 225 CS
Electronic supply voltage U_e	9 - 30 V
Power supply voltage U_p	9 - 60 V
Maximal output current	159 A_{rms}
Continuous output current (UL/CE) ≤ 24 V	54.5 A_{rms}
Continuous output current (UL/CE) ≤ 60 V	46 A_{rms}
PWM frequency	32 KHz
PWM mode	SVPWM
Motor types	Brushless motors, linear motors
STO	Yes
Security integrity level (SIL)	SIL 3
Performance level (PL)	PL e
Fieldbus	CAN
Galvanically isolated	Yes
CAN protocol	DS301
Encoder supply	5 V / 0.2 A
Encoder evaluation	SSI / incremental encoder / BiSS
Number of inputs / outputs	6 digital IN / 3 digital OUT / 2 analog IN
Size	111 x 100 x 56 mm
Assembly	Wall
Installation requirements	IP54
Maximum operating ambient temperature	-40 °C to 40 °C

Dimensional Drawing

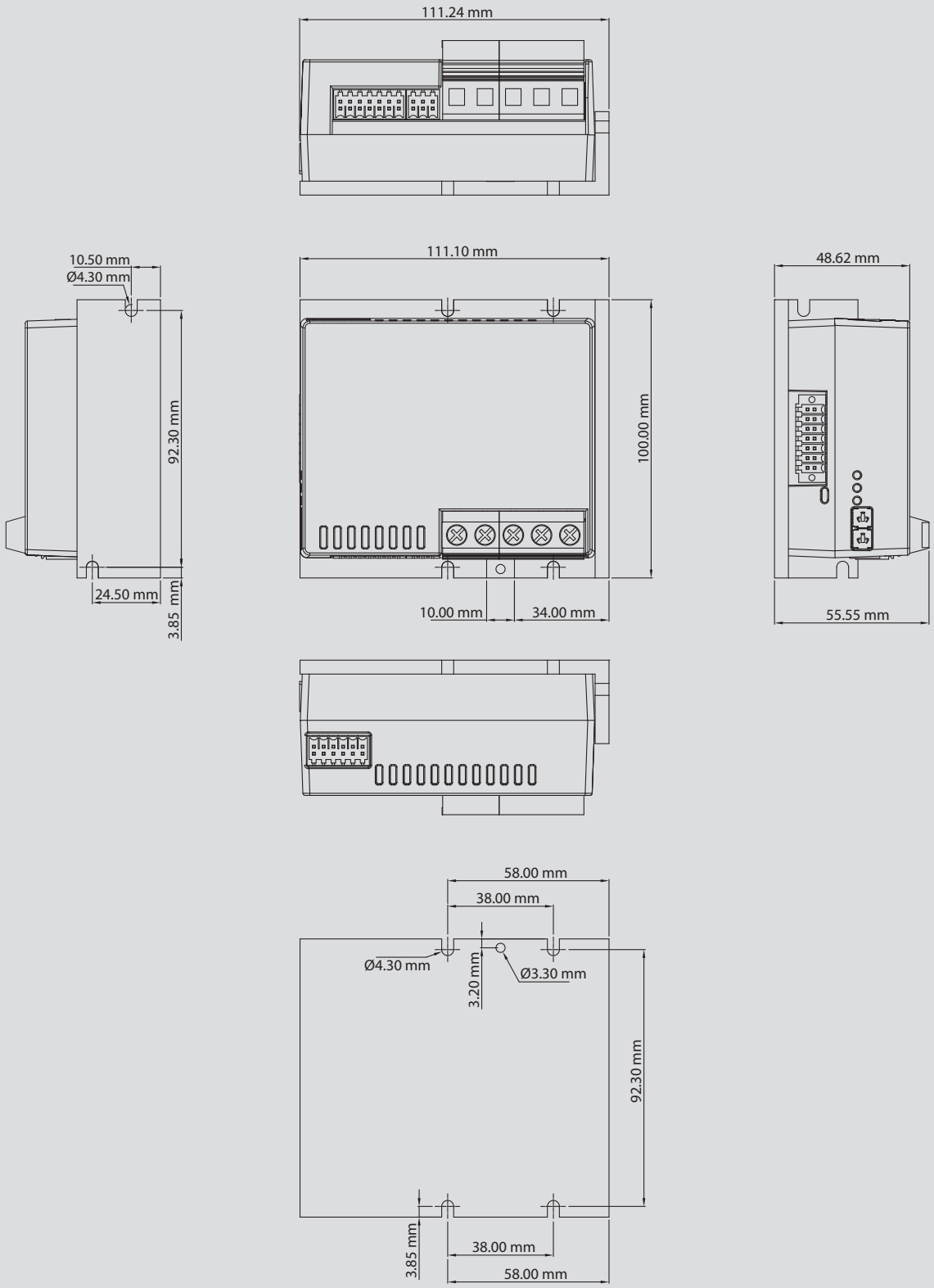

HCL Servo Drive

225 C / E

Specifications	HCL 225 C	HCL 225 E
Electronic supply voltage U_e	9 - 30 V	
Power supply voltage U_p	9 - 60 V	
Maximal output current	159 A_{rms}	
Continuous output current (UL/CE) ≤ 24 V	54.5 A_{rms}	
Continuous output current (UL/CE) ≤ 60 V	46 A_{rms}	
PWM frequency	32 KHz	
PWM mode	SVPWM	
Motor types	Brushless motors, linear motors	
STO	Yes	
Security integrity level (SIL)	SIL 3	
Performance level (PL)	PL e	
Fieldbus	CAN	EtherCAT®
Galvanically isolated	Yes	
CAN protocol	DS301	
Encoder supply	5 V / 0.2 A	
Encoder evaluation	SSI / incremental encoder / BiSS	
Number of inputs / outputs	6 digital IN / 3 digital OUT / 2 analog IN	
Size	111 x 100 x 39 mm	78 x 74 x 29 mm
Assembly	Wall mounted	
Installation requirements	IP54	
Maximum operating ambient temperature	-40 °C to 40 °C	

Dimensional Drawing HCL 225 C

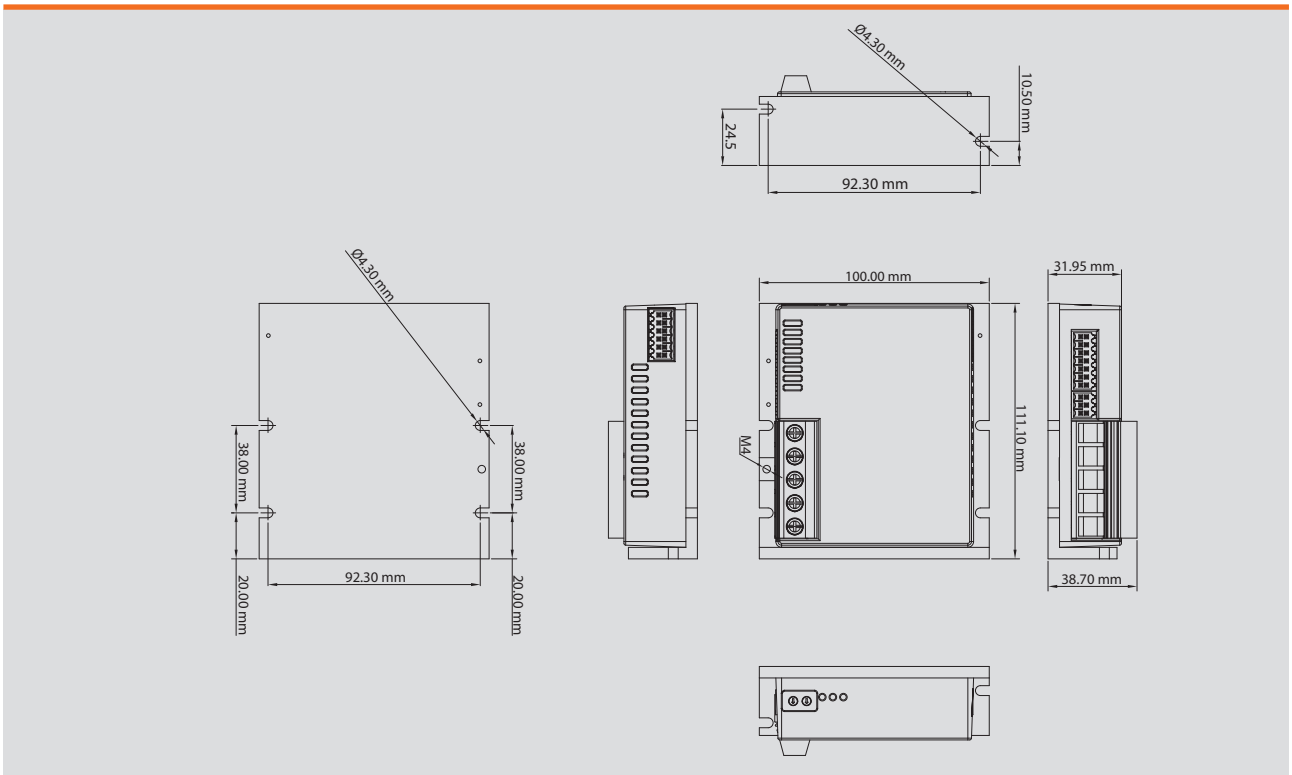

Dimensional Drawing HCL 225 E

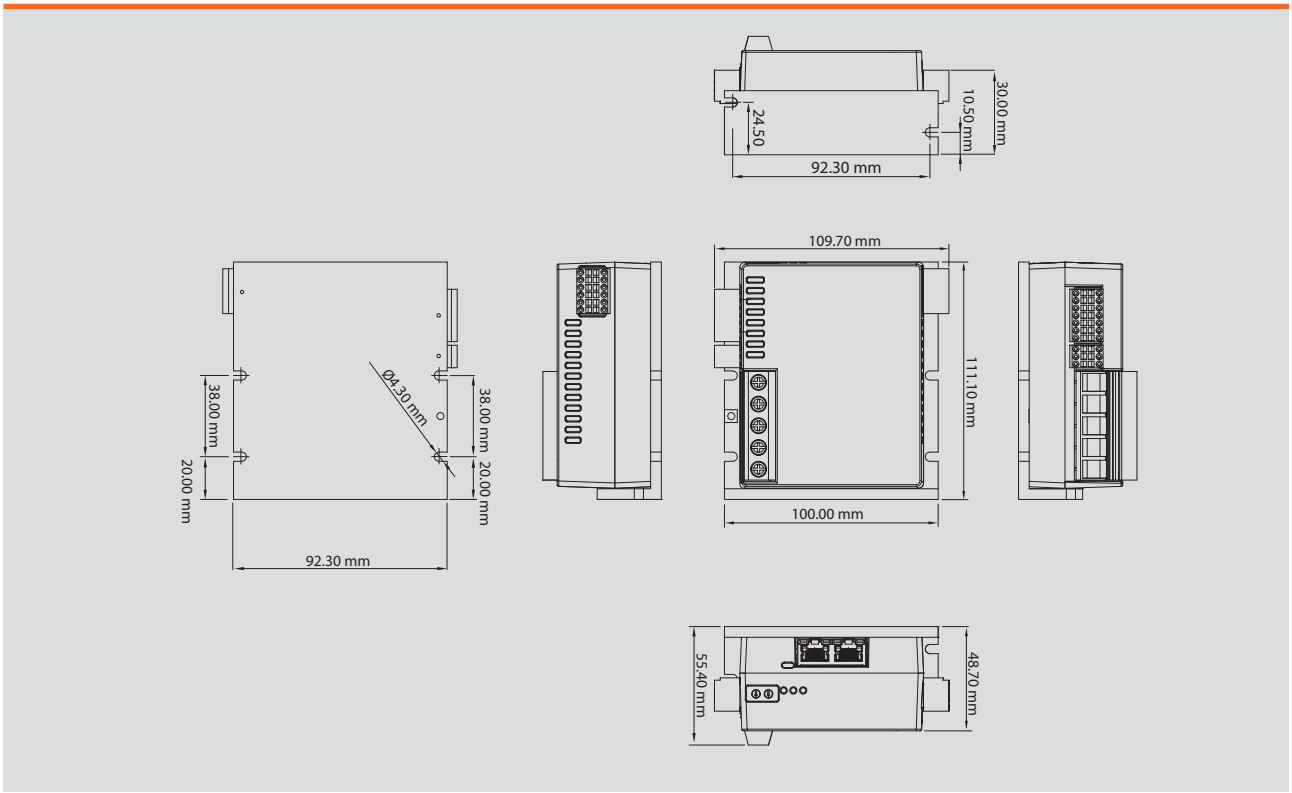

Drives

Technical data subject to change! Last changes: 11/2025

Heidrive GmbH
Starenstraße 23
D-93309 Kelheim

Phone +49 9441/707-0
Fax +49 9441/707-259

info@heidrive.de
www.heidrive.com